e-ISSN: 2582-5208
International Research Journal of Modernization in Engineering Technology and Science
(Peer-Reviewed, Open Access, Fully Refereed International Journal)
Volume:04/Issue:05/May-2022 Impact Factor- 6.752 www.irjmets.com

PLANNING & EVOLUTION OF OIL COOLANT SEPERATOR INTENDED FOR INDUSTRIAL AND SEA APPLICATION

Jitendra Satpute*1, Kirankumar Pal*2, Sanket Phulpagar*3, Manoj Raut*4, Tejas Potdar*5

*1Assistant Professor, Department Of Mechanical Engineering, Suman Ramesh Tulsiani Technical Campus Faculty Of Engineering, Khamshet, Pune, Maharashtra, India.

*2,3,4,5UG Students, Department Of Mechanical Engineering, Suman Ramesh Tulsiani Technical Campus Faculty Of Engineering, Khamshet, Pune, Maharashtra, India.

ABSTRACT

This paper deals with the separation of oil and water to find out the better solution for oil recovery from the water surface mixture Empress Oil spill to produce oil free water. Also, it deals with the fabrication of mechanical equipment to separate oil from the water. Oil and water separator is mechanical equipment, which is used in the environment pollution control from oil spillage. Oil separator helps in removing the oily from the mixing surface leaked water. By removing the oil from industry mixture water, it becomes free of oil pollution. This is mainly due to acrylic material used in the oil separator. This oil separator can be used in the effluent treatment plant. This paper consists of construction, fabrication details, assembly, working and applications of oil and water separator. There is the different method to remove the oil from the water but disc type oil skimmer is mostly used. Various other methods and techniques of oil skimming or water oil separation were also studied while manufacturing and design of the model of oil skimmer and during the preparation of this technical paper. This project provides method for increasing efficiency of oil skimmer by using marine ply disc and scrapper to prevent marine pollution by oil spill. It also provides information and methods on how it can be used in various industries to separate the oil water mixture. Improvements in design and equipment's through which efficiency can be increased have also been provided through this technical paper. The results and conclusions acquired by using disc oil skimmer have been provided through this technical paper.

Keywords: Oil, Disc, Skimmer, Efficiency.

I. INTRODUCTION

The oil skimming is an operation of removing or segregating oil from coolant or water with the help of machine.

One of the following procedures are adopted to segregate the oil from water or coolant:

1. By segregating the oil from the coolant or liquid by forcefully pouring the upper layer of mixture in another container.

2. By soaking the oil layer using oil soaking element.

3. Use solar system to perform the operations eco-friendly

4. By removing oil using disc arrangement. The segregation principle, upon which the technique depends, is dependent on three physical properties of oils, mainly specific gravity, surface tension and affinity. Most oils have a lower specific gravity than water, which allows it to separate from water and float to the surface unless agitated. These oils are possible to collect using a liquid extractor. Other oils in the environment do the opposite and, if unagitated, sink to the bottom of the water and must be collected by other means than skimming. The light oils, which can be skimmed off the water surface, are possible to collect due to the surface tension and affinity of the oil. Most oils have little or no affinity for coolant or liquid, which prevents mixing of oil and coolant. As the skimming medium enters the water, the oil wets the surface preventing water from doing the same.

II. METHODOLOGY

Oil and grease are always on the water surface because of its low density. They do not mix with water. Separation of it is based on the surface tension, specific gravity and viscosity of them. The oil and grease extractor unit has special purpose disc, which is rotated by mechanical means such that it just touches the surface of water the oil and grease particle stick to the disc material and travels with the rotating disc to

scrapping arrangement where scrapping of oil and grease occurs and oil grease are collected. Rotating discs are used to attract oil. The collected waste liquid is scraped off and the oil pumped to a collection tank. These units generally float on the surface of the water but larger installations may use fixed units. In this project all the parts or assembly is mounted on floating tube. The motor is used to drive oil skimming disc which is practically deep in water to make contact with oil in water. The disc rotates and collects oil from water due to its skimming properties. The solar panel is used to charge battery and ultimately run motor and make system portable and wire free. The rubber scraper is attached with disc and collect oil in storage container.

COMPONENTS OF MACHINE

a) DC Gear Motor: A DC motor of any class of rotary electrical machine that converts direct current electrical energy into mechanical energy. The most common types rely on forces produced by magnetic fields.

b) Chain Drive: Chain drive is a medium of transmitting mechanical power from one place to another place. It is often to use covey power to the wheels of the vehicle, particularly bicycle and motor cycle.

c) Shaft: On the shaft the wheel and the disc are mounted on the horizontal shaft.

d) Bearing: Bearing is a mechanical component that separates the moving part and takes the load.

e) Oil Extracting Disc: Oil skimming disc is having a material available on market is Mild Steel, PVC disc and Acrylic Disc.

f) Floating Tube: It is a rubber tube. Its floating on the water surface

g) Scrapper: A tool or device used for scrapping especially for removing the dirt, paint or other unwanted matter from the surface.

h) Solar panel: Solar panel is a panel designed to absorb the sun's rays as a source of energy for generating electricity.

III. MODELING AND ANALYSIS

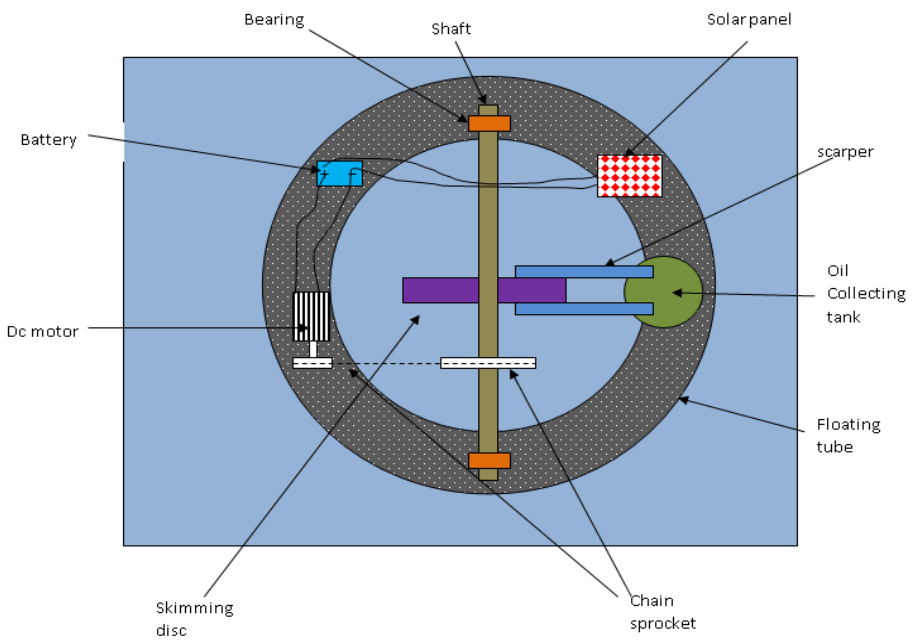

Figure 1: Schematic of Sea Oil Separator

DESIGN AND ANALYSIS OF SOLID MODELING

Procedure

- The entire model has been designed with the help of designing software solid works.
- With the help of colour feature the colours are given to the entire model.

Figure- Cad model of the assembled project is designed on Solid works 2018 software

SOLID MODELING

The entire model has been designed with the help of designing software solid works.

e-ISSN: 2582-5208
International Research Journal of Modernization in Engineering Technology and Science
(Peer-Reviewed, Open Access, Fully Refereed International Journal)
Volume:04/Issue:05/May-2022 Impact Factor- 6.752 www.irjmets.com

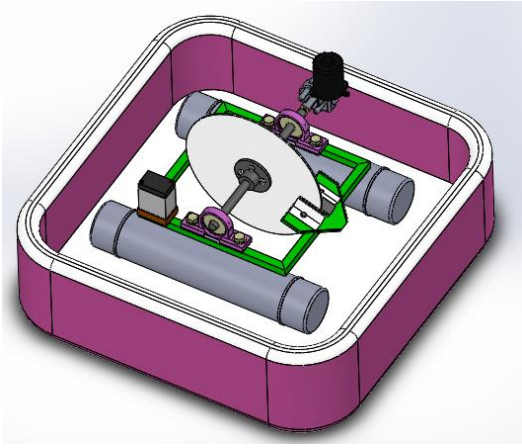

Figure 2: Isometric View

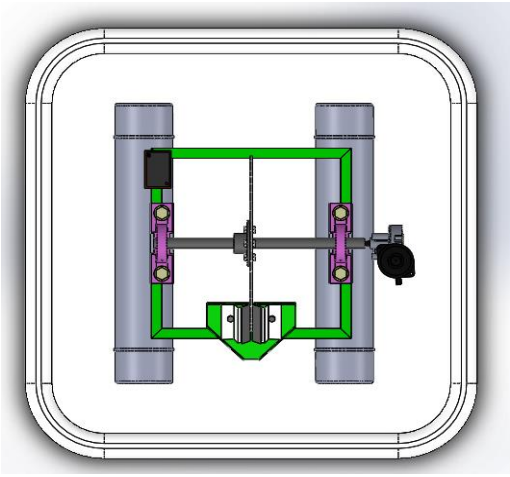

Figure 3: Top View

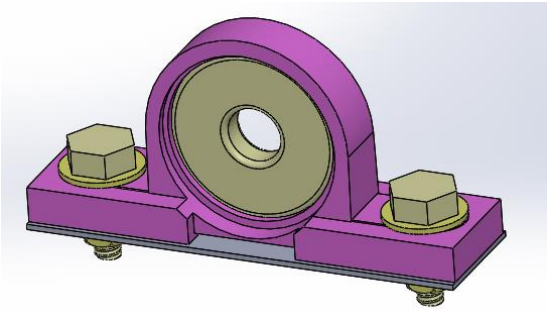

Figure 4: Pedestal Bearing

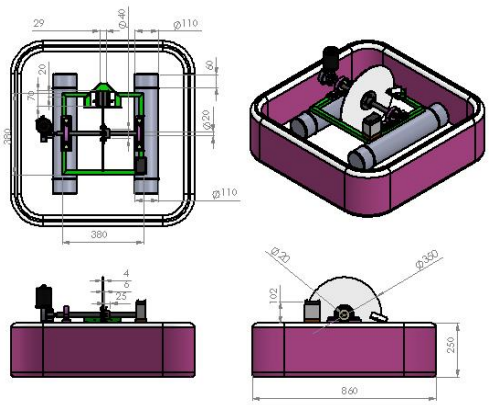

Figure 5: Drafting

e-ISSN: 2582-5208
International Research Journal of Modernization in Engineering Technology and Science
(Peer-Reviewed, Open Access, Fully Refereed International Journal)
Volume:04/Issue:05/May-2022 Impact Factor- 6.752 www.irjmets.com

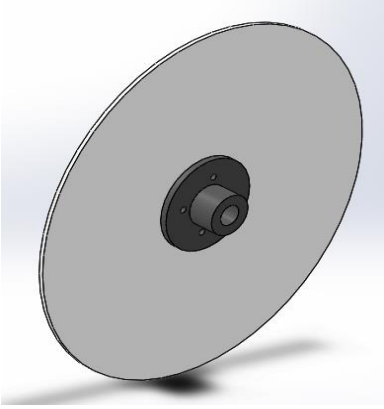

Figure 6: Skimmer Disc

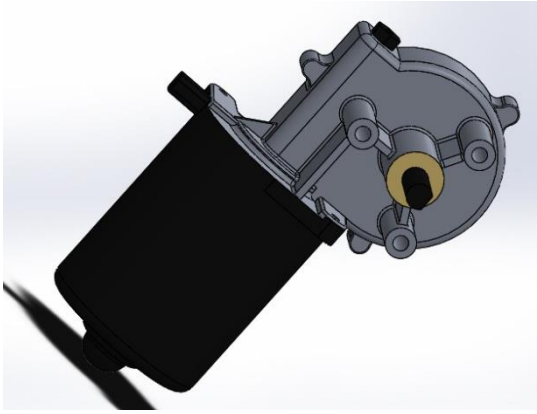

Figure 7: Gear Motor

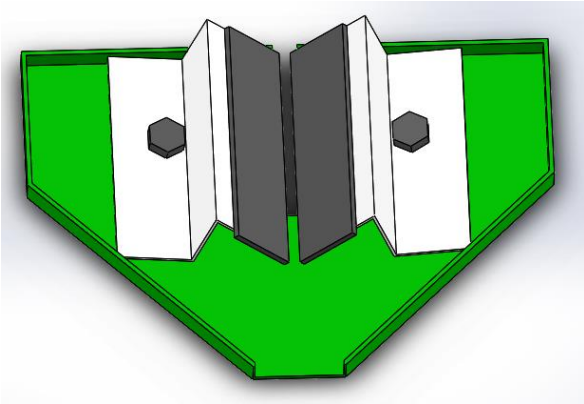

Figure 8: Scrapper

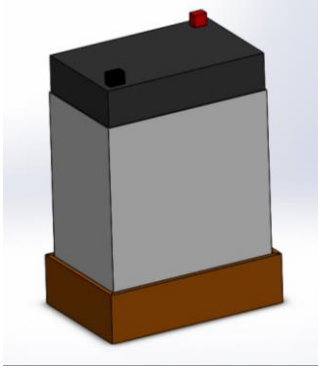

Figure 9: Battery

IV. RESULTS AND DISCUSSION

METAL PROPERTIES & CALCULATIONS

A. EN 10083 C45 Carbon Steel

C45 steel sheet: Physio-chemical testing items for products of the plant include tensile test, hardness test, impact test, flattening test and chemical composition analysis, etc. C20, C45 steel pipes are manufactured by cold drawn process. C45 is a medium carbon steel is used when greater strength and hardness is desired than in the "as rolled" condition. Extreme size accuracy, straightness and concentricity combine to minimize wear in high speed applications. They are turned, ground and polished.

Soft Annealing: Heat to 680-710oC, cool slowly in furnace. This will produce a maximum Brinell hardness of 207.

Normalizing: Normalizing temperature: 840-880oC & cool in air.

Hardening: Harden from a temperature of 820-860oC followed by water or oil quenching.

Tempering: Tempering temperature: 550-660oC & cool in air.

Technical delivery conditions for non-alloy steels, these steels are for general engineering purposes

	Comparison of steel grades	
C45 EN 10083-2 Number:1.0503	JIS G 4051	S 45 C
	DIN 17200	C 45
	NFA 33-101	AF65-C 45
	UNI 7846	C 45
	BS 970	070 M 46
	UNE 36011	C 45 k

e-ISSN: 2582-5208
International Research Journal of Modernization in Engineering Technology and Science
(Peer-Reviewed, Open Access, Fully Refereed International Journal)
Volume:04/Issue:05/May-2022 Impact Factor- 6.752 www.irjmets.com

B. CHEMICAL COMPOSITION OF EN C45 STEEL

Grade	C (%)	Si (%)	Mn (%)	P(%) max	S(%) max	Cr (%)
C45	0.42-0.50	0.15-0.35	0.50-0.80	0.025	0.025	0.20-0.40

C. MECHANICAL PROPERTIES OF EN C45 STEEL

1	Condition	Yield Strength R° (Mpa)	Tensile Strength Rm (Mpa)	Elongation A5 (%)	Hardness HRC	Quenching Temperature (°C)	Bend ability	Nominal Thickness, t 1.95mm≤t≤10.0mm	
								Rolled	Annealed
C45	Rolled Annealed Water-quenched Oil quenched	460 330	750 540 2270 1980	18 30	58 55	820 860	Min. recommended Bending radius (≤90°)	2.0×t	1.0×t

D. PROPERTIES OF STEEL C45 (1.0503)

Weldability: Due to the medium-high carbon content it can be welded with some precautions. Hardenability: It has a low hardenability in water or oil; fit for surface hardening that gives this steel grade a high hardness of the hardened shell.

Why is Mild Steel C-45 selected?

1. Easily available in all sections.
2. Good Weldability
3. Machinability
4. Cutting ability
5. Cheapest in all other metals.

Material = C 45 (mild steel)

Take Fos=2

$\sigma_t = \sigma_b = 540/fos = 270\ N/mm^2$

$\sigma_s = 0.5\ \sigma_t$

$= 0.5 \times 270$

$= 135\ N/mm^2$

e-ISSN: 2582-5208
International Research Journal of Modernization in Engineering Technology and Science
(Peer-Reviewed, Open Access, Fully Refereed International Journal)
Volume:04/Issue:05/May-2022 Impact Factor- 6.752 www.irjmets.com

Product Information

ITEMS INFO

SPECIFICATION FOR OPTION:

Round bar	Diameter: 4mm~800mm or as required
Steel plate	Thick:8mm~300mm, Width:100mm~2300mm
Angle bar	Size:3mm*20mm*20mm~12mm*800mm*800mm
Square bar	Size: 4mm*4mm~100mm*100mm
	Width:10mm~2000mm
Hexagonal	Size: 4mm~800mm
Length: 2m,4m,5.8m,6m,11.8m,12m or as required	

MECHANICAL PROPERTY:

Annealing	Forging	Tempering and Hardening	Normalization
Subcritical annealing: 650~700	1100~850	Tempering: 550~660	840~880
Isothermal annealing: 820~860		Hardening : 820~860 water	

CHEMICAL COMPOSITION:

NO.	C	Mn	Si	Cr	Cu	Ni	P	S
Aisi 1045	0.43~0.50	0.6~0.9	0.10~0.60				≤0.040	≤ 0.050
DIN1.1191	0.42~0.48	0.6~0.9	0.15~0.35	≤0.15	≤0.3	≤0.2		
JIS S45C	0.42~0.50	0.5~0.8	≤0.40	≤0.40		≤ 0.4		
C45	0.42-0.50	0.5~0.8	0.4~0.8				≤0.035	≤0.035
GB45	0.42~0.50	0.5~0.8	0.17~0.37	≤0.25	≤0.25	≤0.3	≤0.035	≤0.035
EN8	0.42~0.48	0.6~0.9	0.15~0.35	≤0.20	≤0.30	≤0.20	≤0.030	≤0.030

CCSI CCS INDUSTRIAL CORP. CE SGS

Figure 10: Properties of Steel C45

E. DESIGN OF MOTOR:

Power of Shaft = P = 15 watt

Power transmitted by shaft,

$$P = \frac{2\pi NT}{60}$$

Where, N→ Rpm of motor shaft = 18

T →Torque transmitted

$$15 = \frac{2\pi \times 18 \times T}{60} \times 10^3$$

T = 7.95 x 10^3 N-mm

F. DESIGN OF SHAFT

Now, T_1 is the maximum torque among all shafts, so we will check shaft for failure here.

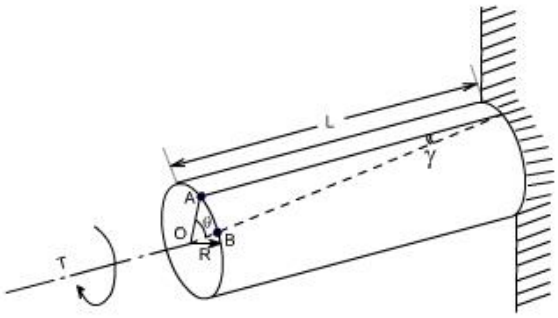

Figure 11

$$T = \frac{\pi\, \sigma s\, d^3}{16}$$

7956.7 = π /16 x 135 x d^3

D = 6.69 mm.

e-ISSN: 2582-5208
International Research Journal of Modernization in Engineering Technology and Science
(Peer-Reviewed, Open Access, Fully Refereed International Journal)
Volume:04/Issue:05/May-2022 Impact Factor- 6.752 www.irjmets.com

But we are using 20 mm shaft, so our design is safe.

G. SELECTION OF BEARING

For 20mm Shaft diameter we take standard breaking no. P204

P-204 Bearing

P = pedestal bearing

2 = spherical ball or deep groove ball bearing

= 04 = 5 × 4 = 20mm

Bore diameter of bearing = 20mm.

H. FORCE GENERATED BY MOTOR ON DISC

T = Force × Radius of disc

7956.7 = F × 175

F = 45.46 N

F = 45.46 N **F = 4.63 Kg**

9.81

I. BATTERY CALCULATIONS

Charging Time:

Battery - 6V/4.5 Amp = 27 watt

Solar Panel – 3 watt

Current (I) = P/V

I = 3/10.2

I = 0.29 Amp

Charging Time = (Battery Watt/Panel Watt)

= (27/3)

= 9 Hrs.

Discharge Time = (Battery watt/Total watt Consumed)

= 27/15

≈ 1.8 Hrs

= 108 min

Discharge Time = 108min.

J. DESIGN OF TRANSVERSE FILLET WELDED JOINT.

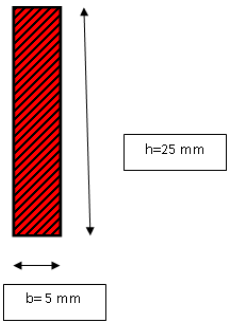

e-ISSN: 2582-5208
International Research Journal of Modernization in Engineering Technology and Science
(Peer-Reviewed, Open Access, Fully Refereed International Journal)
Volume:04/Issue:05/May-2022 Impact Factor- 6.752 www.irjmets.com

Welding

Hence, selecting weld rod size = 3.2mm

Area of Weld = 0.707 x Weld Size x L

= 0.707 x 3.2 x 25

= 56.56 mm^2

Force exerted

Stress induced = Force Exerted / Area of Weld

Maximum Allowable Stress for Welded Joints = 21 N/mm^2

SR NO.	OIL QUANTITY	TIME	% OIL PURITY
1	100 ML	33 SEC	90%
2	200 ML	55 SEC	92%
3	300 ML	70 SEC	95%
4	400 ML	82 SEC	97%

Demonstration Readings

A. OBSERVATIONS

1. The system is restricted to recovery of low-density oils (i.e., oil which floats on water).
2. The rotation speed of the skimming element is restricted as it is inversely proportional to the efficiency of system.
3. The system gives it maximum efficiency in standstill water.
4. The oil collector capacity is limited due to weight increment reasons.
5. The system can give high efficiency only in small scale oil spill cases.
6. The width of Disc is limited due weight increment reasons.

V. CONCLUSION

Separation processes are essential elements of the technological foundation of industry. In addition to the importance of separation technologies in industrial processes separation processes also present opportunities for waste reduction and more efficient. Removal of unwanted oil from water which saves environmental and economic problems. Disc skimmer gives best results comparatively. The separator is simple in design and very reliable considering all the constraints. The trial taken shows that design satisfies its purpose. It is found to be very convenient for skimming the oil for the operator. It is very much helpful to operators, as it avoids their tedious work of skimming the oil and grease from the wastage water. It is easy, effective, economical and environ friendly system to tackle the global crisis of the oil spill. It has many advantages over present day technologies to clean spilled water. It can effectively clean the water surface recovering most of the oil back in usable form. The system can be automated and run-on solar system making it greatly capable to survive on its own. Hence lots of human efforts are eliminated and hence oil spill can get faster and efficient response. The hazardous effects of oil spill are thus effectively reduced. Hence, Solar based, disc type, oil spill recovery system promises to be an important tool against global crisis of oil spill. It also helps in

• Controlling the water pollution.

• Efficient and economical removing of oil

1. The use of a grooved pattern can increase the recovery efficiency by 100-200%. The grooved pattern proved to be efficient even on such challenging oils as Diesel.

2. The recovery efficiency of the grooved surface can be improved by tailoring groove dimensions to oil properties. Using more shallow and narrow groves for light diesel and fuel oil, and deeper and more open grooves for heavier oils may lead to even higher increase in the recovery efficiency.

3. The selection of the recovery surface material can increase the recovery efficiency by 20%.

4. The recovery efficiency significantly depends on the type of petroleum product and is typically proportional to its viscosity (when the oil is at a temperature above its pour point).

In this project, we enforced to highlight the function of oil skimmer, its various design aspects and performance. All the results of experimental studies indicate that slight design improvement of typical oil skimmers towards to include additional belt shall and use of belt with steel material instead of rope; significantly improve the oil recovery efficiency and also its structure became simpler. As practical Overview of different oil spillage cleanup method. This Project has illustrated several limitations of these methods and current oil spill technology.

Further extensive research & testing can improve the existing techniques and equipment to have better control for oil recovery exercise.

VI. REFERENCES

[1] UNITED STATES PATENT (April 28, 1981) by R. Ayers (Houston); Kenneth L. Bickham (Spring). Patent Number: 4264450

[2] UNITED STATES PATENT (May19, 1998) by William Fredrick Haynes, Charles Berndt Phelps, Richard John Hanahoe. Patent Number: 5753108

[3] DESIGN AND FABRICATION OF OIL SEPARATING DEVICE WITH WATER PURIFIER by Kunte Shubham, Masuti Pratham, Waghmare V. H.(May 2018)

[4] A REVIEW ON DEVELOPMENT OF FLAT BELT TYPE OIL SKIMMER by Lokhande M. M., Pawar R.R., Maind D. M., Kamble V. V., Prof. Vadnere A. P., Prof. Badgujar P. P. (April, 2017)

[5] ANALYSIS OF BELT TYPE OIL SKIMMER by Thombare Babasaheb B., Barse Babasaheb N., Barhate Ganesh B., Kolhe Sani M., Jagtap Harshal B. (2018)

[6] PERFORMANCE OF A ROTATING DRUM SKIMMER IN OIL SPILL RECOVERY by A H Hammoud and M F Khalil (February 2003)

[7] OIL RECOVERY WITH NOVEL SKIMMER SURFACES UNDER COLD CLIMATE CONDITIONS by Arturo A. Keller and Kristin Clark (May 1, 2008)

[8] SEA OIL SEPARATOR WITH DISC AND BELT SKIMMER by Manoj Pol, Roez Khan, Sanjay Jat and Vikram Suvarnkar. (April 2018)

[9] DESIGN AND EFFICIENCY COMPARISON OF VARIOUS BELT TYPE OIL SKIMMERS by Mamta Patel (January 2015)

[10] DESIGN & FABRICATION OF DISC TYPE OIL SKIMMER by Suraj Nair, Kajol Kamble, Sayali Shewale, Sanjay Lohar. (April 2017)

[11] CONSTRUCTION OF AN ECONOMIC BLANKET BELT OIL SKIMMER by Sumon Khandakar, Md. Nasiqul Islam, Robiul Islam Rubel, Sk. Suzauddin Yusuf. (2017)

[12] HYDRODYNAMIC SEPERATOR UNIT FOR REMOVAL AND RECOVERY OIL FROM WASTEWATER by Mohamed Ahmed Mahmoud (2016)

[13] DESIGN AND FABRICATION OF BELT TYPE OIL SKIMMER by S. Siva, P. Praveen, P. Tamil Selvan. (2017)

[14] STUDY OF OPERATING CONDITIONS FOR OIL SKIMMER APPARATUS FROM WATER by Rafi Jamal Algawi, Maha Adnan Dawood. (2017)

[15] THE IMPROVEMENT OF OILWATER SEPARATION TECHNOLOGY IN OIL SPILL MECHANICAL RECOVERY by Zhang Yindong, Yang Jie, Zhang Xingming, Li Wenhua. (2014)

[16] ENHANCED OIL RECOVERY USING THE ROTATING-DISC SKIMMER by A M Najar and J. T. Turner. (November 1, 2000)

[17] A METHOD TO CHARACTERIZE MATERIALS TO BE USED ON OLEOPHILIC SKIMMERS by Victoria Broje, Arturo A. Keller. (May 2005)

[18] BILGE OIL-WATER SEPARATOR by Sanket R. Deshmukh, Pooja Jagadeesan, Anushka Chandra, Phalguni Raut. (July 2013)

[19] Papers for statements.

[20] TORREY CANYON (United Kingdom, 1967)

[21] https://en.wikipedia.org/wiki/Torrey_Canyon_oil_spill

[22] ODYSSEY 9(Off Canada, 1988)

[23] https://www.itopf.org/in-action/case-studies/odyssey-off-canada-1988/
[24] AEGEAN SEA (Spain, 1992)
[25] https://www.itopf.org/in-action/case-studies/aegean-sea-spain-1992/