e-ISSN: 2582-5208
International Research Journal of Modernization in Engineering Technology and Science
(Peer-Reviewed, Open Access, Fully Refereed International Journal)
Volume:04/Issue:05/May-2022 Impact Factor- 6.752 www.irjmets.com

ENERGY MANAGEMENT OF GRID THROUGH VEHICLE TO GRID TECHNOLOGY

Ganesh Rathod[*1], Devid Kirsan[*2], Vaibhav Diwane[*3], Parimal Bhalme[*4], Rajani Sahare[*5]

[*1,2,3,4]B.E. Final Year Student, Department Of Electrical Engineering, Government College Of Engineering Nagpur, Nagpur, Maharashtra, India.

[*5]Assistant Professor, Department Of Electrical Engineering, Government College Of Engineering Nagpur, Nagpur, Maharashtra, India.

ABSTRACT

This project mainly focuses on the concept of Vehicle to Grid technology As we know that the demand on the power system is increasing day by day as the power generated will also be limited according to the generation capacity hence there by causing the heavy load to be there on the grid so there will chances of imbalance in the power system so This prototype shows that it will fed the increasing demand on the grid through Vehicle battery with the help of arduino as a controller to perform the operation as the demand exceed above the set value the Arduino gives command to the relay to shift the supply of the load to the EV battery supply from the Grid supply.

Keywords: Vehicle-To-Grid (V2G), Electric Vehicle (EV), Charging Station, Demand And Supply, Smart Grid.

I. INTRODUCTION

In India the people are moving toward the electric vehicle from the diesel or petrol vehicle as it will provide better advantages such as it makes no pollution at all. Electricity is one of the important part of our life without Electricity we cannot imagine our life. In Power system there always be a variation in the demand and supply on the grid. Particularly the demand is always be forecasted from the loads and it will be fed by the grid supply. As we see that the electricity demand is increasing day by day by day due to urbanization, industrialization also sometimes peak demand on grid will occur due to the unexpected failure of power plants, bad weather condition etc.

Electric vehicles can be used as a major power source as it comes with a batteries to fed the increased load demand. With the more number of electric vehicle we are getting more power that can be utilized. Electric vehicles are mostly parked for 10 to 20 hrs a day that is used for the transportation purpose so that it can fed the increased load demand very easily and also owner of the vehicle will also get paid for this and this can be done with the permission of the owner. With the help of the Vehicle to Grid technology this can be done.

Vehicle to Grid Technology plays an important role in providing the stabilization for the grid i.e. balancing the power in the grid. V2G means the integration of the electrical vehicle, grid and charging station. In order to get the bidirectional power flow the two way charger are used in the charging station so it will the operation according to the requirement. Here the Grid means the smart grid that is connected to the main grid. Fed the increase load demand is the main function of the V2G technology this is at the major level but we can also use this technology at the domestic purpose for the home also.

II. LITERATURE SURVEY

Concept of V2G was first explored by Willett Kempton and Steven E. Legendre. In the papers, authors have explored the possibilities of utilizing the electric vehicles for the benefits of the electric power system with increasing intermittent RES (Renewable Energy resources).

First V2G demonstration project was realized by Alec N Brooks, when the cost of vehicle is higher, battery capacity is adequate for transport use and battery life is limited, it is only suitable for the high value market such as frequency regulation and imbalance, which is also known as ancillary services.

After the realization of the V2G concept and key findings from the initial projects, it is realized that an individual EV connected to grid as a distributed energy source (DER) has very less impact on the grid. Their batteries needs to be grouped or aggregated in order to make effective impact at grid level.

e-ISSN: 2582-5208
International Research Journal of Modernization in Engineering Technology and Science
(Peer-Reviewed, Open Access, Fully Refereed International Journal)
Volume:04/Issue:05/May-2022 Impact Factor- 6.752 www.irjmets.com

III. METHODOLOGY

In order to explain the vehicle to grid concept the hardware is designed and readings were taken in the following manner:

- Initially the load (dc motor) runs on the power from the grid that is sufficient for the load in order to fed the load we have converted the 230v supply into the 12v dc supply with the help of adapter and the current is measured through the current sensor1 that is connected in series with the load and the relay 1 also.
- As the current consumption on the load side increases above the set value the power from the grid is insufficient to fed the load hence the power supply of the motor load shifts from the 12v dc supply i.e. grid to the battery
- As the battery is supplying the power to the load the state of charge of the battery starts decreasing. When the state-of-charge of EV battery falls below the set value of minimum SOC that is measured by the voltage sensor connected across the power supply from the EV's battery to the load stops and the battery is scheduled for charging from the grid i.e. power supply

IV. BLOCK DIAGRAM

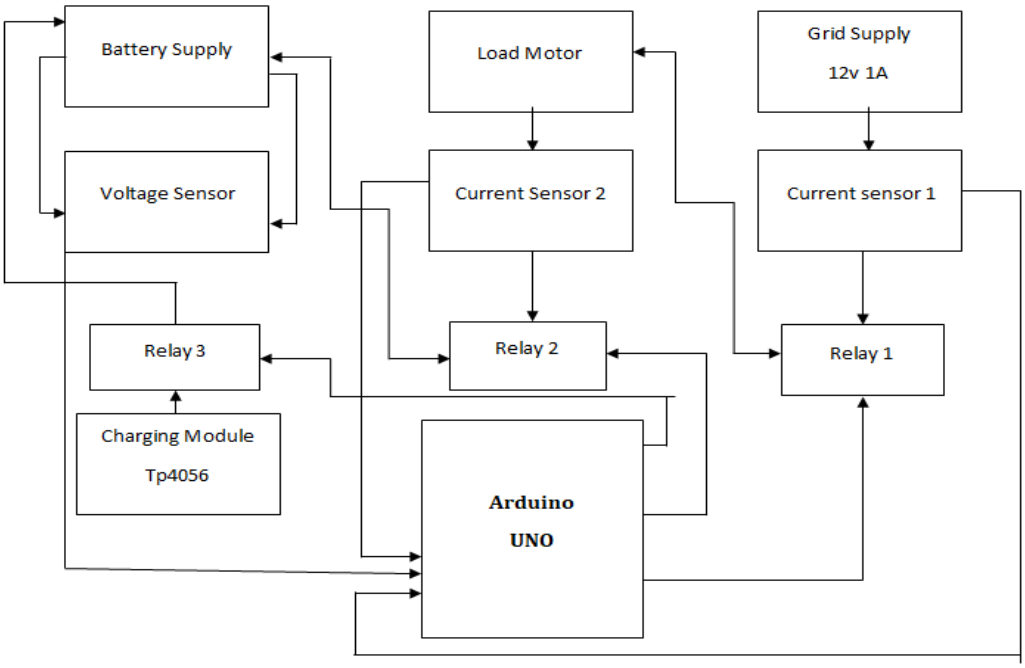

V. CIRCUIT DIAGRAM

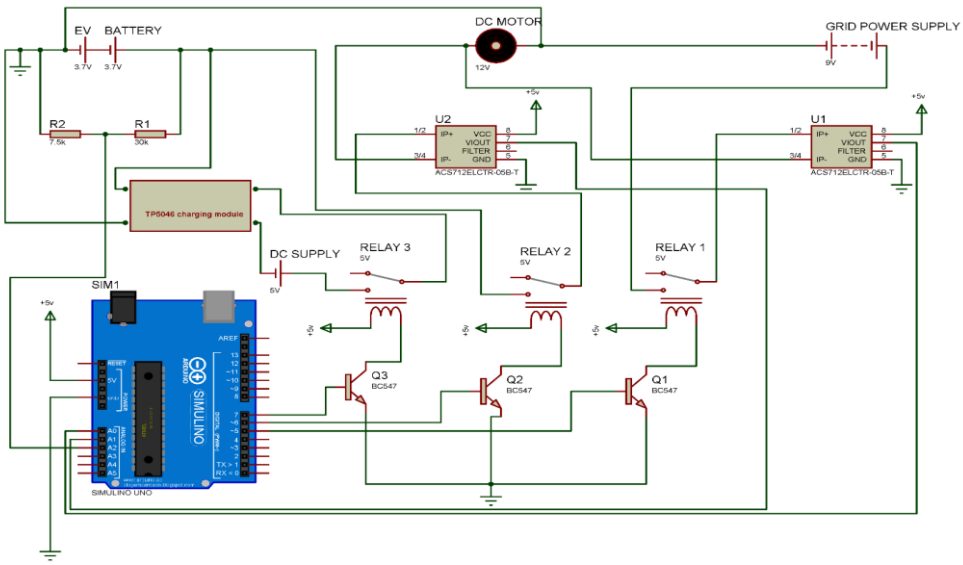

e-ISSN: 2582-5208
International Research Journal of Modernization in Engineering Technology and Science
(Peer-Reviewed, Open Access, Fully Refereed International Journal)
Volume:04/Issue:05/May-2022 Impact Factor- 6.752 www.irjmets.com

VI. MODELING AND ANALYSIS

Sr.No.	Name of Components	Specification	Quantity
1.	Arduino Uno	Operating voltage-5v 14 digital I/O pins 6 analog inputs	1
2.	4 channel Relay Module	5v DC,70mA	1
3.	voltage sensor	Input Voltage: 0 to 25V Voltage Detection Range: 0.02445 to 25V	1
4.	Current Sensor	5v,5A	2
5.	Lithium-Ion Battery	3.7v,2200 mAh	2
6.	TP5046 charging module	3.7-4.2v, 1A	1
7.	Dc motor	12v	1
8	Power Adapter	12v,1A	1

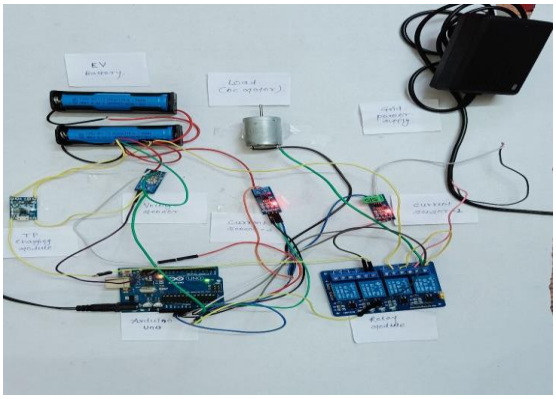

Prototype for demonstrating the vehicle to grid technology

VII. RESULTS AND DISCUSSION

Simulation Results:

Case(A)Load is being supplied from the grid power supply when the power is sufficient on the grid

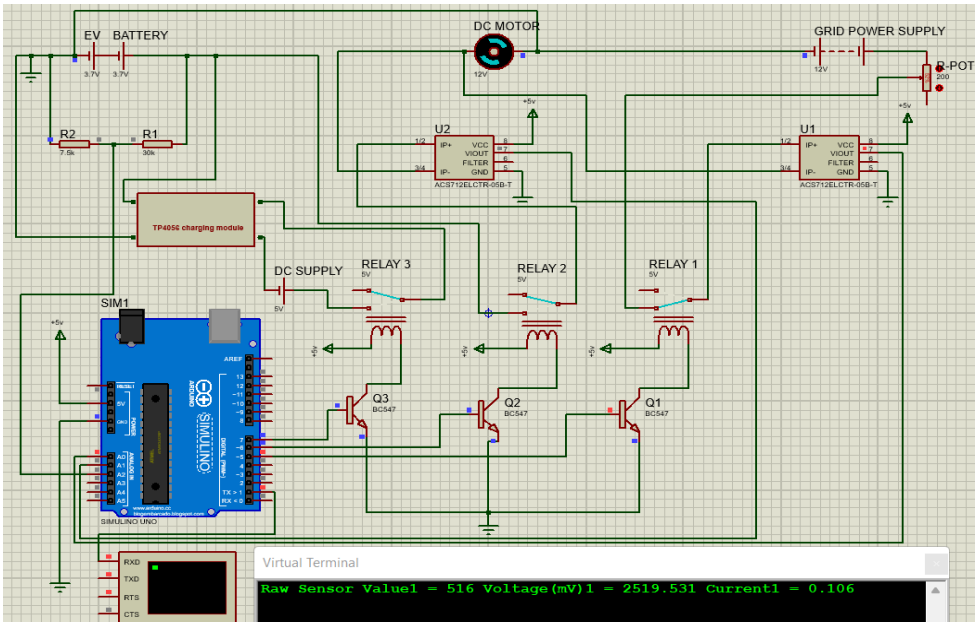

e-ISSN: 2582-5208
International Research Journal of Modernization in Engineering Technology and Science
(Peer-Reviewed, Open Access, Fully Refereed International Journal)
Volume:04/Issue:05/May-2022 Impact Factor- 6.752 www.irjmets.com

Case(B)As Load demand increases the power being fed by the electric vehicle battery

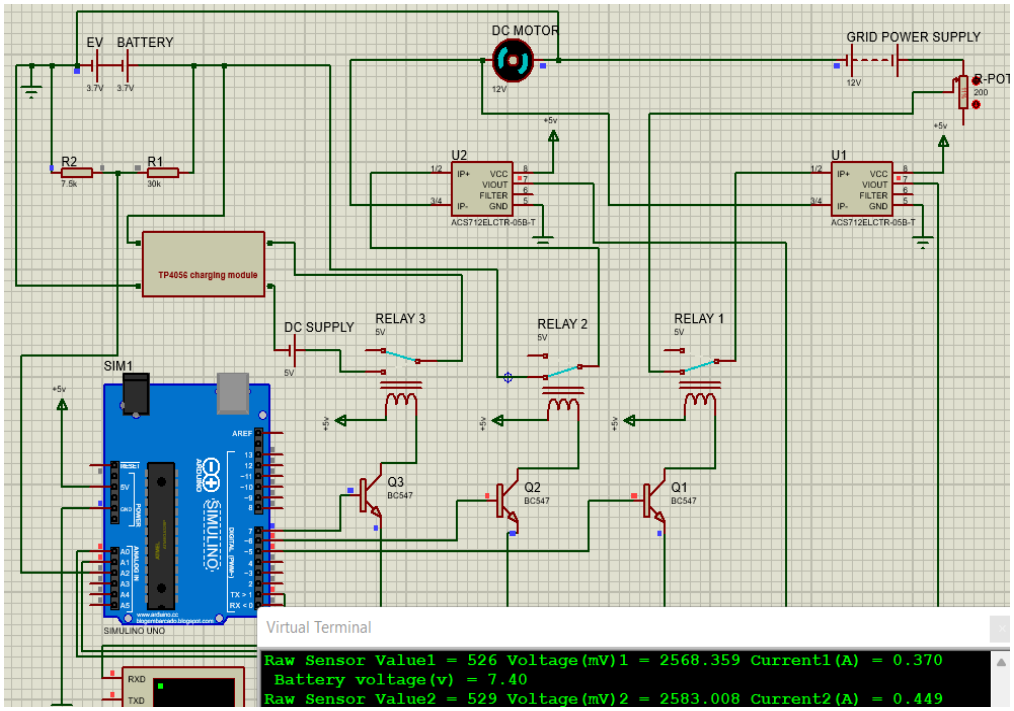

Result:-

Case(A): In this case load is running successfully from the 12v grid supply and the power taken by the load is

$$P1=12*0.106=1.272w$$

Case(B):When the load current increases above set value as 0.25A then the power is

$$P2=12*0.37=4.44w$$

The increased load demand is P0=4.44-1.272=3.168w and the supply to the load is now being fed by the 2 electric vehicle battery of 3.7v each then the power is P=7.4*0.449=3.32w hence the power is being fed by the electric vehicle battery successfully and when the state of charge of the battery starts decreasing below the particular set minimum Soc the vehicle battery starts charging.

VIII. FUTURE SCOPE

Electric vehicle charge stations serve as grid connection points for power delivery. As there are many advantages of V2G Technology such as Electric Vehicles can provide Extra power during demand, Grid regulation(automatic generation control AGC) , Uninterruptible power source for businesses and homes ,Demand charge reduction- monthly cost saving, Increases reliability and efficiency of the power system ,Profit for car owner. V2G technology takes cheap and abundant off-peak power and allows it to be brought back into the system to meet daytime peak power demands in the place of extra daytime fossil fuel generators.

IX. CONCLUSION

The aforementioned results and conclusion argue on how during peak or additional load demand, energy can be supplied through Electric vehicles that are parked ideally at different Electric Vehicle Charging Stations provided these electric vehicles have sufficient State-of-Charge. On the other hand, if an electric vehicle is not sufficiently charged for it to be able to supply power to the grid, it is scheduled for charging during the off-peak times of load. This experimentation successfully shows how vehicle-to-grid technology can be implemented on a smaller scale which can further be expanded at a greater level. It pragmatically illustrates how a central grid controlling unit can govern the grid by managing energy during the time of peak load. In addition to the above, it depicts electric vehicles as a temporary energy storage resource which can be utilized when there is an excess demand over the limited generation capacity. Conclusively, in conjunction with the realistic world, this technology might turn out to be beneficial in current times when renewable sources are majorly taking over the energy production scenario.

X. REFERENCES

[1] Vojdani, "Smart Integration" Power and Energy Magazine, IEEE, vol. 6, pp. 71-79, 2008. Available: https://ieeexplore.ieee.org/document/4626381 6. B. K. Sovacool and R. F. Hirsh, "Beyond batteries: "An examination of the benefits and barriers to plug-in hybrid electric vehicles (PHEVs) and a vehicle-to-grid (V2G) transition" Energy Policy, vol. 37, pp. 1095- 1103, 2009. Available:

[2] https://doi.org/10.1016/j.enpol.2008.10.005

[3] Vehicle-To-Grid Technology in a Micro-grid Using DC Fast Charging Architecture2019 IEEE Canadian conference of electrical and computer Engineering (CCECE)

[4] "Integrated energy management of a plug-in electric vehicle in residential distribution systems with renewables", IEEE Int. Symposium on Industrial Electronics-Brazil, 2015.

[5] "Vehicle to Grid technology "International journal of Innovative research and development

[6] Grid Management through Vehicle-To-Grid Technology International Journal of Recent Technology and Engineering (IJRTE) 2021

[7] Pritish Pani, Abhishek R Athreya, Aishwarya Panday, Hari Om Bansal and H. P. Agrawal- "Integration of the vehicle to grid technology" Int. Conference on Electrical and Electronics Engineering, Malaysia, 2015. Available: http://dx.doi.org/10.1109/EnergyEconomics.2015.7235108

[8] MD. Anamul Haque, "Vehicle to grid technology", 2017 Available:
https://www.slideshare.net/anamulhaque790693/vehicle-to-gridtechnology12.ToyotaTsusho Corporation and Chubu Electric Power Co., Inc., "The Overview of the V2G Demonstration Project",