e-ISSN: 2582-5208
International Research Journal of Modernization in Engineering Technology and Science
(Peer-Reviewed, Open Access, Fully Refereed International Journal)
Volume:04/Issue:08/August-2022 Impact Factor- 6.752 www.irjmets.com

DESIGN OF MARS ASCENT VEHICLE FOR MARS EXPLORATION

Samuel Girma*1, Yeabsira Mengesha*2, Yeabsira Simeka*3

*1,2,3Student, Department Of Aerospace Jain University Bangalore, Karnataka, India.

DOI : https://www.doi.org/10.56726/irjmets29299

ABSTRACT

Nowadays lots of researches and investigations are carrying out by different space oriented companies (such as NASA and Space X) on occupying of planet mars to lift up the human life beyond the planet earth. Since Mars have nearly similar atmosphere with earth and the existence craters on the Mar's surface increased the curiosity of scientists by implying life may exist on other planet rather than earth. NASA launched rovers that can resist hostile environment on the surface of the planet, but never carried crews and cargo. This paper presents about the vehicle that aids crew and cargo to lift off from the earth surface and land on the Martian surface called the MARS ACENT VEHICLE (MAV). It describes about the conceptual design of the mars ascent vehicle and tentative cost estimation for theproduction of the vehicle. Various requirements of the vehicle such as performance, communication, control systems, propulsion and environmental requirements are explained in this paper.

Keywords: Mass Ascent Vehicle, NASA, TSTO.

I. INTRODUCTION

Mars is the next frontier for human space exploration. The first humans to set foot on Mars will spark an era of innovation, just as the first humans to set foot on the moon sparked excitement and optimism for humankind. Manned exploration of the surface of Mars will also be key to understanding the planet'shistory and its possible long-term habitability. For these reasons, NASA has made manned missions to Mars a key goal for 2020-2030. Achieving this goal requires rapid technological development and international cooperation. Nowadays NASA'S Human spaceflight group is investigating an adaptive marsmarketing campaign to outline an evolutionary route from present day spaceflight framework and abilities to the remaining purpose of touchdown people at the floor of mars and get back to earth. For this reason the mars ascent vehicle (MAV) has a major impact on the transportation framework, affecting the design of landing entry and descent phase and performance for launching from earth and transport to mars. This survey gives a top-level view of the vehicle with an outline of its functioning and arrangement, structure of the vehicle and subsystem traits and premises and lastly the general performance of the vehicles with trajectory layout and load characteristics, mass, and subsystem design and vehicle performance sensitivity.

Research related to MAV have been done some of which is as follows:

1. Alexander Seligson, Harris Paspuleti, Andrew Huh, Hannah Quirk: the paper "light weight ascent vehicle" discusses the conceptual design of Mars Ascent Vehicle which includes the propulsion system, the thermal protection system (TPS and AFSRI are used), the internal and external structures, the power and the avionics concepts behind the design of the MAV. It explains the methods of achieving minimum dry and wet mass of MARS Ascent Vehicle and how the production can be done with a minimum cost. It also suggests the trajectory with a shortest period of time and also predicts the product time line for the production of MAV

2. Tara P.Polsgrove, Thomas K.Percy, Michelle Rucker, Herbert D.Thomas: Updated Mars Ascent Vehicle Design for Human exploration Describe the propulsion system, fueling system, and power system in the MAV, as well as how the MAV produces propellant from local resources and its trajectory to complete the mission. The MAV carries the crew from the surface of Mars to a waiting Earth return vehicle. In this research paper the mass of the MAV is high due to the usage of fuel cell to power the vehicle instead of the solar cell.

3. Tara Polsgrove, Dan Thomas, Steven Sutherlin, Walter Stephens and Michelle Rucker: This paper significantly improves our understanding of MAV requirement and design. In-vehicle overview the configuration analysis resulted straightforward crew access and also the low centre of attraction for the universal Lander that is preferred for controllability at some point of the EDL (Entry, Descent and Landing) phase. In the configuration system, there are two-stage vehicles. One with three 100KN engines on the

e-ISSN: 2582-5208
International Research Journal of Modernization in Engineering Technology and Science
(Peer-Reviewed, Open Access, Fully Refereed International Journal)
Volume:04/Issue:08/August-2022 Impact Factor- 6.752 www.irjmets.com

empirical stage consisting of fundamental thrust systems. In addition, the other with the single-engine on the second stage. The configuration and the propulsion systems are almost similar and the liquid oxygen is used as an oxidizer and the liquid methane is used as fuel.

4. Polsgrove, Tara P; Thomas, Herbert D: "Human Mars ascent vehicle performance sensitivities " This paper presents the consequences of an assortment of responsiveness exchanges influencing MAV execution including: landing site scope, target circle, beginning push to weight proportion, organizing choices, explicit drive, force type and motor plan. Mars Ascent Vehicle Gross Lift-off Mass Sensitivities for Robotic Mars Sample Return.

5. Dux, lan J., Huwaldt, Joseph A.; Mckamey, R. Steve; Dankanich, John W: The paper "Mars Ascent Vehicle Gross Lift-off Mass Sensitivities for Robotic Mars Sample Return" describes the mars rising vehicle with sample return mission. It states about the characteristics of the vehicle to be constructed to resist different situations including trans Mars tests, entry through the Martian climate, and the ability to lift off payload though low mars atmosphere. It highlights projects started on the innovation of mars rising vehicle by NASA

In the previous researches we found a research gap of the technological requirement for MAV to complete the mission is not mentioned, in our paper the requirements have been stated.

Aims and objectives

- To design of mars ascent vehicle for mars exploration which can take crew and cargo from the surface of the earth to the surface of mars with the minimum weight of vehicle and energy loss.
- To minimize the mass of the vehicle and also eases thetransportation stages

II. METHODOLOGY

The objective of the design of mars ascent vehicle for mars exploration is taking crew and cargo from the surface of the earth to the surface of mars with the minimum weight of vehicle and energy loss. The result of the design leads to obtain lightweight, cost efficient, thermally coated, power saving MAV.

In this project, we have used the Catia V5 software to design the conceptual design of the mars ascent vehicle. Catia V5 (Computer Aided Three Dimensional Interactive Application) is a computer aided designing software that used to design a three dimensional body which integrates Computer Aided Engineering and Computer Aided Manufacture.

The design prepared on the part design work bench of the software. We have used different tools on the part design work bench such as pad, pocket, shaft, groove, circular pattern and other tools. After preparing the part designs they are assembled on the assembly work bench of the Catia V5 software. Finally the mass and stress analysis has been done on the Generative Structural Analysis work bench of the software.

III. MODELING AND ANALYSIS

The conceptual design of the MAV which is designed by Caltia V5 software is presented below.

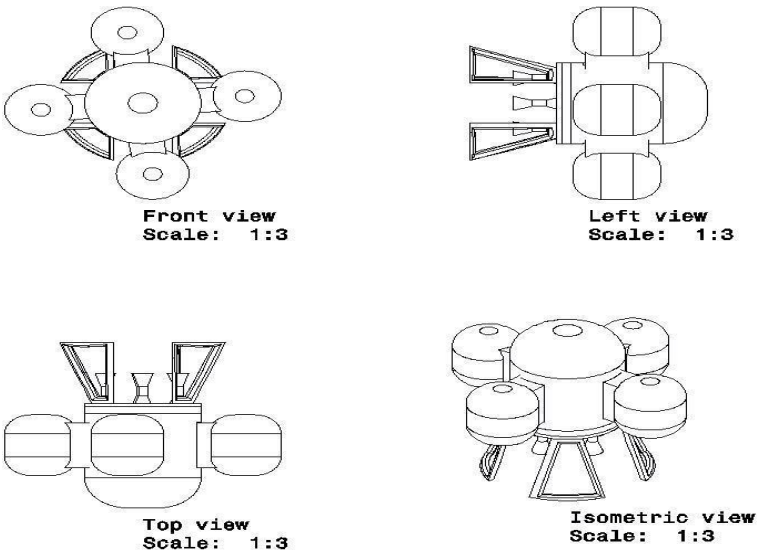

Figure 1: Conceptual Design of mars ascent vehicle with catia v5.

e-ISSN: 2582-5208
International Research Journal of Modernization in Engineering Technology and Science
(Peer-Reviewed, Open Access, Fully Refereed International Journal)
Volume:04/Issue:08/August-2022 Impact Factor- 6.752 www.irjmets.com

✓ The vehicle component have a total masses at the initial containing payload and the propulsion is 38.8, that hold 4.6 ton unit cabin, 22.5 t initial stage, and 11.7 t next stage. It also contains 19.2 t of advanced propellant. On the initial stage and 8.5 on the next stage.

The general implementation of the Mars Ascent Vehicle with a help of flow chart is presented below:

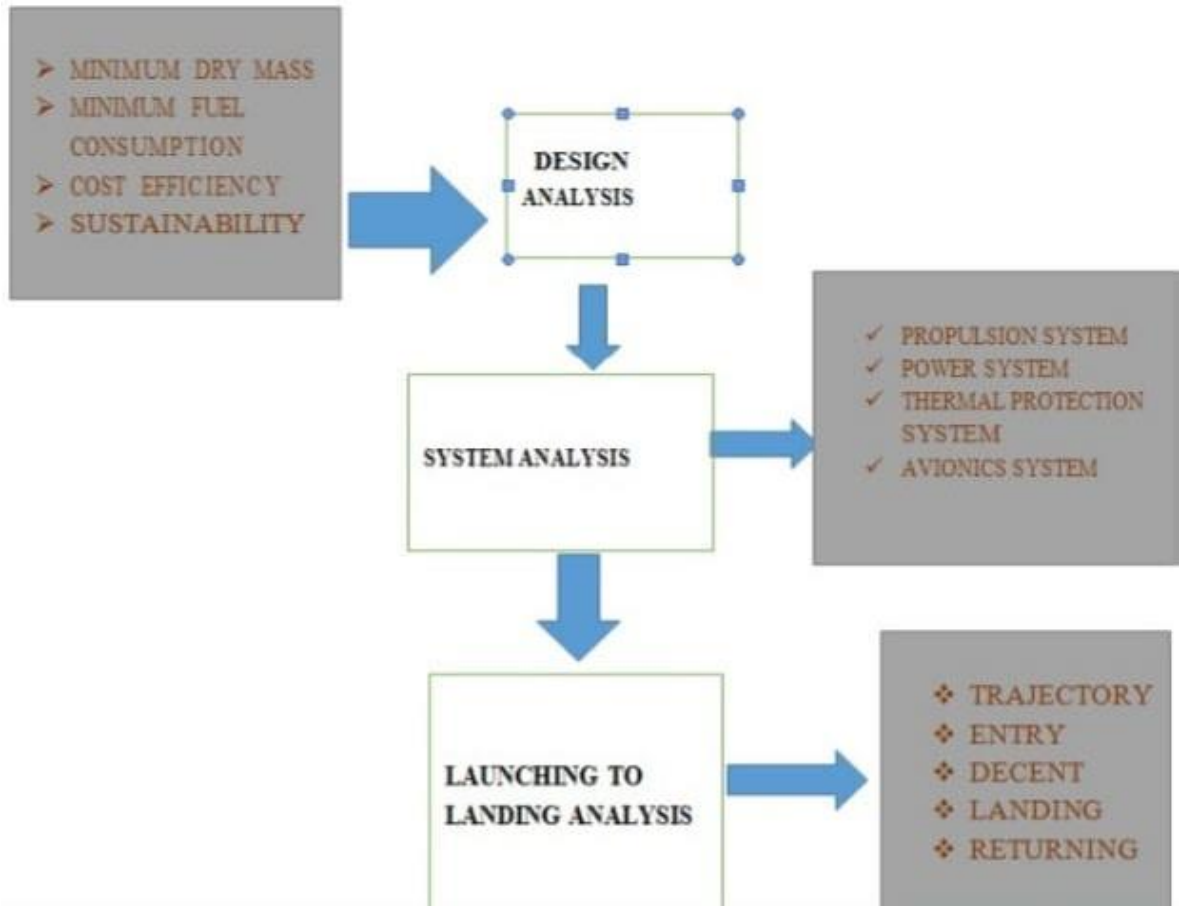

Figure 2: Flow chart for the implementation of the design of MAV

IV. RESULTS AND DISCUSSION

Performance Requirements

Performance requirements describe how the MAV Vehicle System Manage certain mission under specific conditions. The relevant test parameters have been better understood by deriving needs from MAV designs. Performance will typically be verified at the component and subsystemlevel. The primary performance criteria to be verified during an integrated test are as follows:

Propulsion

Based on factors such system dry mass, launch height, etc., the principal propulsion systems were sized. A two-stage to orbit (TSTO) MAV launch profile is the standard solution. After clearing the launch tube, the vehicle launches and begins a directed pitch over maneuver. After the first stage burnout, staging, and a lengthy coast phase, the vehicle executes the second stage circularization maneuver. The features of the propulsion system heavilyinfluence how long the first stage burn lasts.

The reaction control system

A spacecraft system that uses thrusters and reaction control wheels to provide attitude control, and sometimes propulsion. the reaction control system(RCS) requirements are also to be determined at this stage.

Separation

An integrated test's main goal is to verify the successful system's sequence of events. Tests are the greatest way to validate staging of the first stage. The risk of re-contact can be reduced due to the lengthy coast period

between first stage shutdown and second stage ignition, but successful staging should be verified through testing.

Communications

To identify probable failure modes, data must be produced and transmitted. The Mars Ascent Vehicle will contain instrumentation including accelerometers, pressure transducers, temperature sensors, etc.

Environmental Requirements

It is assumed that the Mars Ascent Vehicle may have outside structures for thermal control, help structure, power etc.

Throughout various mission phases, the Mars Ascent Vehicle will need to adhere to environmental standards. The Mars Ascent Vehicle must meet the performance criteria given the atmospheric, temperature on Mars for environmental requirements during the launch phase.

Required Technologies of the Mars Ascent Vehicle

Communications	• seeks to address the technical issues in heterogeneous networks. • A time-triggered for vehicles • Communication at a distance using light to carry information's. optical ranging system for measuring the distance to a moving target object
Liquid oxygen and liquid hydrogen Cryogenic Propulsion	• liquid oxygen as a cryogenic oxidizer that is stored at low temperature • liquid hydrogen as a cryogenic fuel
Liquid oxygen In Situ Resource Utilization	• Enables a LOX- predicated providence replying in a lower outbound vehiclemass and major payload- carrying capability Extract oxygen from CO2 in Martian surface to provide a oxidizer for combustion
long-lasting Batteries	High specific energy and low cycle battery cells needed in the system in order to keep the mission for long period of time
Structures and Mechanisms	Light weight ,high toughness materials and construction component

V. CONCLUSION

Researches had been finished to enhance accuracy of the MAV or a manner tolayout. This effort redounded in a substantial enhancement of our information of MAV DESIGN option. The findings of those examinations had been included into the vehicle outline provided on this report. Continued to improve the MAV layout alternatives will assist to discover the maximum promising alternatives for human exploration.

ACKNOWLEDGEMENTS

It gives us great pleasure to thank all of the people whose cooperation and support made it possible for this project to be completed successfully. We want to thank our project guide Dr. Ashish Kumar Gupta, Assistant Professor in the Department of Aerospace Engineering at Jain (Deemed-to-be) University, for giving of his valuable time to be our mentor. We would like to express our special thanks to our coordinator Dr Narayana Swamy Ramaiah, Professor, Dept of Aerospace Engineering his continuous support and encouragement in finishing the project with success. We also would like to thank Mr. Denis K. Mateng'e who mentored us throughout the entire project. We would also like to thank our family, friends and everyone who helped us directly or indirectly with everything throughout the project.

VI. REFERENCES

[1] Dux, I. J., Huwaldt, J. A., McKamey, R. S., & Dankanich, J. W. (2011, March).Mars ascent vehicle gross lift-off mass sensitivities for robotic Mars sample return. In 2011 Aerospace Conference (pp. 1-16). IEEE..

[2] Karp, A. C., Nakazono, B., Benito Manrique, J., Shotwell, R., Vaughan, D., & Story, G. T. (2016). A hybrid mars ascent vehicle concept for low temperature storage and operation. In 52nd AIAA/SAE/ASEE Joint Propulsion Conference (p. 4962).

[3] Polsgrove, T. P., Percy, T. K., Rucker, M., & Thomas, H. D. (2019, March). Update to Mars Ascent Vehicle Design for Human Exploration. In 2019 IEEEAerospace Conference (pp. 1-15). IEEE.

[4] Polsgrove, T., Thomas, H. D., Stephens, W., & Rucker, M. A. (2015). Mars ascent vehicle design for human exploration. In AIAA SPACE 2015 conference and exposition (p. 4416).

[5] Polsgrove, T. P., & Thomas, H. D. (2016, September). Human Mars Ascent Vehicle Performance Sensitivities. In AIAA Space and Astronautics Forum and Exposition (SPACE 2016) (No. M16-5125).

[6] Seligson, A., Paspuleti, H., Huh, A., & Quirk, H. (2021). Lightweight Mars Ascent Vehicle.. Story, G. T., Karp, A. C., Nakazono, B., Zilliac, G., Evans, B. J., & Whittinghill, G. (2020). Mars Ascent Vehicle Hybrid Propulsion Effort. In AIAA Propulsion and Energy 2020 Forum (p. 3727).

[7] Sopegno, L., Valavanis, K. P., Rutherford, M. J., & Casalino, L. (2020, March). Mars sample return mission: mars ascent vehicle propulsion design. In 2020 IEEE Aerospace Conference (pp. 1-9). IEEE.

[8] Story, G. T., Karp, A. C., Nakazono, B., Zilliac, G., Evans, B. J., & Whittinghill, G. (2020). Mars Ascent Vehicle Hybrid Propulsion Effort. In AIAA Propulsion and Energy 2020 Forum (p. 3727).