e-ISSN: 2582-5208
International Research Journal of Modernization in Engineering Technology and Science
(Peer-Reviewed, Open Access, Fully Refereed International Journal)
Volume:04/Issue:01/January-2022 Impact Factor- 6.752 www.irjmets.com

A REVIEW PAPER ON MICROLOGIX CONTROLLER BASED INTELLIGENT TRAFFIC-CONGESTION CONTROL SYSTEM

Rupesh Tayde[*1], Krushna Jadhav[*2], Raj Shirbhate[*3], Ritesh Gade[*4], Ajay Lohate[*5]

[*1,2,3,4]BE Electrical Engineering Student, Marathwada Mitra Mandal's College Of Engineering, Karve Nager, Pune 411052, India.

[*5]Assistant Professor, Department Of Electrical Engineering, Marathwada Mitra Mandal's College Of Engineering, Karve Nager, Pune 411052, India.

ABSTRACT

In the current scenario, controlling traffic in crowded areas has now become very difficult for the traffic police. This paper will be introducing the initial steps in the implementation of the Intelligent Traffic Congestion Control System, based on MicroLogix Programmable Logic Control (PLC) technology. The PLC is a device that can be used to automatically regulate congestion problems. The system maintains a record of how many vehicles are in each lane and uses that information to manage traffic. By using sensor and counting operation, it will count the number of vehicles and provide prioritized signals based on their count. For executing this concept, PLC based control system is used for monitoring and helping in improving public transportation services.

Keywords: Traffic Control; Programmable Logic Controllers; Sensor; Counter; Lamps.

I. INTRODUCTION

As we know, traffic control is one of the most important public facilities for road users [1]. We know that the road traffic is increasing every day and it is very difficult to control that traffic. In a conventional traffic system, it has been noted that the timing of each lane's signal light glowing will always be the constant [2] [3] [4]. Sometimes it is possible that, one particular lane is more congested than another lane. In such cases, conventional traffic systems fail to provide priority to that crowded traffic lanes [5] [6]. To overcome that problem, we are introducing the MicroLogix Controller Based Intelligent Traffic-Congestion Control System [7]. The system keeps track of how many vehicles are in each lane and uses that information to control traffic. We are using sensors and counting operations to calculate the number of vehicles at each lane and gives prioritize the signal according to their counting [8] [9] [10].

II. PROBLEM STUDY

Nowadays many countries suffer from traffic congestion which leads to many problem-like accidents, traffic jams. Traffic jams not only create additional delays and aggravation for drivers, but they mostly increase fuel consumption, transportation expenses, and carbon dioxide, which leads to air pollution. Unregulated demand, insufficient capacity, long red-light waits, and other factors all contribute to traffic congestion. In heavy traffic jams, handling the traffic manually involves constant manpower with continuously monitoring, with the conventional controlled system as a consequence, troubleshooting the system becomes extremely difficult.

To overcome such a problem, we need to switch advanced controllers, and PLC-SCADA is one of them. PLC-SCADA has the feature of automatically monitoring and maintaining traffic based on the program developed.

III. PLC AND SCADA SYSTEM

PLC is a control device or system that continuously controls and monitors the status of input and output devices using a custom or user defined program. There are few ways to program a PLC and one of them is ladder logic which is the representation of old relay logic. It is basically derived from the relay logic diagram, and it includes different functions like timing, counting, arithmetic and special function which allow PLCs to perform several different types of tasks.

Allen Bradley MicroLogix 1400, 1766-L32BWA PLC is used in this project. This compact type controller has embedded 12 fast 24V dc input, 8 standard 24V dc input and 12 relay output.

We implemented a total of 6 inputs for the project, which included 2 push buttons (for the start and stop operation) and 4 inductive proximity sensors to detect the presence of vehicles. For indication purposes, the

e-ISSN: 2582-5208
International Research Journal of Modernization in Engineering Technology and Science
(Peer-Reviewed, Open Access, Fully Refereed International Journal)
Volume:04/Issue:01/January-2022 Impact Factor- 6.752 www.irjmets.com

field outputs are 12 lamps and that is (Red, Yellow, and Green). There are many ways to communicate between the PLC and computer and Ethernet cable is one of them.

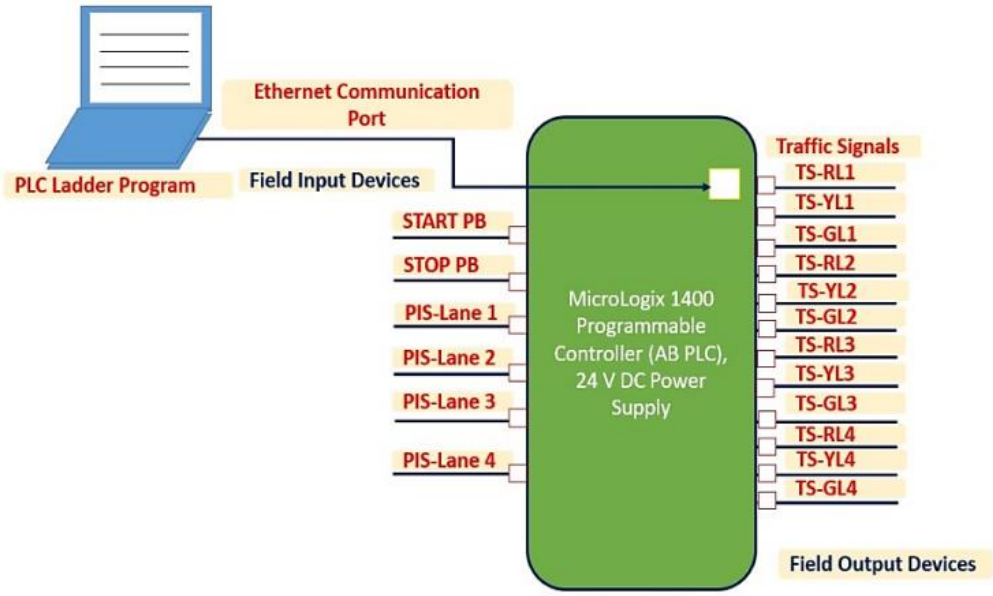

Figure 1: Overall PLC Block Diagram

SCADA (Supervisory Control and Data Acquisition) is nothing but software that includes various GUO's (Graphical User Interface) forms or displays on which users can create the different processes and these processes can be linked with the controlling hardware like plc or other controllers for the controlling purpose.

IV. REVIEW OF LITERATURE

Muhammad Arshad Khattak: - The research's primary objective is to design and implement an intelligent traffic control system. The technology is meant to detect the presence or absence of a vehicle within a particular range and adjust the traffic signal length accordingly. By calculating the proper timing for the green signal to illuminate using some mathematical functions. The system may be able to assist in the resolution of the traffic congestion challenge. [1]

C Barz: - A traffic control system is presented that is operated by a PLC and receives signals from multiple road sensors. The overall system developed guarantees the adjustment of the four intersections, creates a route that takes into account the adjustment of the green traffic light, integrates additional sensors, and uses radar sensors to notify road users on recommended speeds to approach the green areas at intersections. [2]

Mohit Dev Srivastava: - The first steps toward developing an innovative traffic light control system using PLC technology are presented. To determine traffic density, this system counts the number of vehicles in each lane and their weight, then parks or diverges vehicles accordingly. It's also difficult for traffic police to keep a closer eye on the problem at all times. [3]

Rajeshwari Sundar: - As a result, traffic disturbances have become dramatically increased in recent years, and conventional traffic light controllers are limited by the fact that they operate on predefined hardware that cannot be updated in real-time. The waiting period is longer due to the fixed time intervals of green, orange, and red signals. A new approach is known as "Smart Traffic Control System" is emerged to make traffic light control more efficient. The red and green light timings will be automatically decided based on traffic on roads. [4]

V. WORKING PRINCIPLE

In this project we are using Allen Bradley 1400 series AB PLC. The main motive of this project is to control and monitor the traffic density of the four-way road. The purpose of the project is that minimizes the density of traffic. For controlling the traffic, we required input signal which is inductive type proximity sensor. The project layout shows that each lane has one proximity sensor placed at certain distance from the traffic signal. The proximity sensor detects a vehicle and the counter counts the number of vehicles by sensor. If the count is equal

e-ISSN: 2582-5208
International Research Journal of Modernization in Engineering Technology and Science
(Peer-Reviewed, Open Access, Fully Refereed International Journal)
Volume:04/Issue:01/January-2022 Impact Factor- 6.752 www.irjmets.com

or greater than preset value, then signal will turn to green for certain duration of time (say 30 secs) which will be greater than predefined time. And if traffic is minimum (counter value is lesser than preset value) it will turn green after predefined value (say 20 secs). And this cycle will repeat for all lane. For time control we use the timers. There are 3 types of timers: TON timer, TOFF timer, and Retentive timer. But for project requirement we used TOFF timer. TOFF timer will start when the rung is true (high). And it will be remaining on until the accumulator value is equal to the preset value. For counter there are two types up counter and down counter. Here we used up counter which will count the value from the digital input (inductive proximity sensor). The purpose of the counter is to count the value and if the counter value is equal to the preset value, it will give command through the digital output (traffic light).

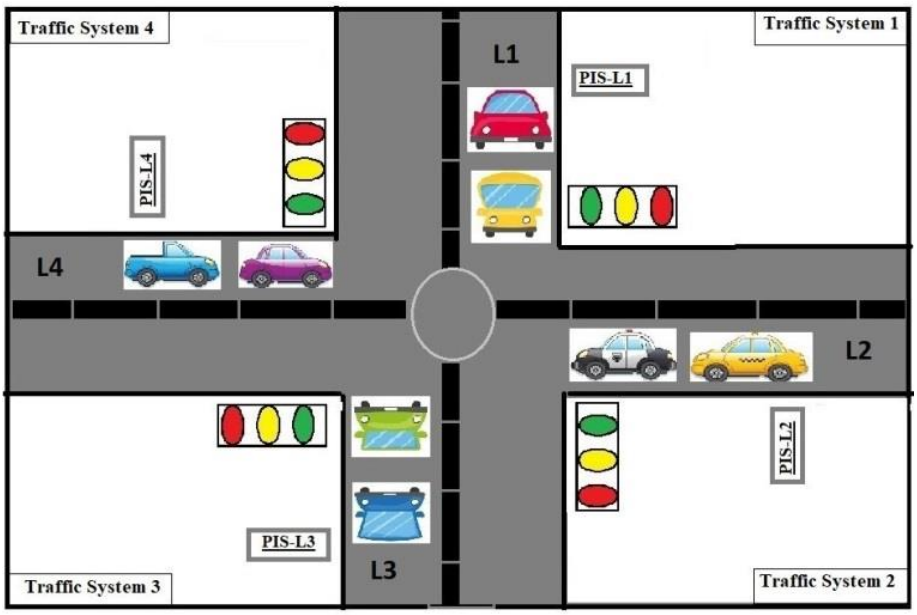

Figure 2: Project Layout

VI. SPECIFICATION OF COMPONENT

1. PLC (Programmable Logic Controller)

In the project we used the 1766-L32BWA series PLC. The Allen-Bradley 1766-L32BWA is a part of the MicroLogix 1400 series PLC. It combines the features of previous MicroLogix 1100 controllers, such as Ethernet/IP, online editing capabilities, and an LCD with enhanced features.

Special Features: - Built-in RTC, 6 HSC, up to 7 Expansion I/O, Online Editing

Communication: - Modbus RTU, DF1, DH-485, ASCII, DNP3, DNP3 over IP, Modbus TCP/IP, EtherNet/IP messaging.

Figure 3: MicroLogix Programmable Logic Controller

e-ISSN: 2582-5208
International Research Journal of Modernization in Engineering Technology and Science
(Peer-Reviewed, Open Access, Fully Refereed International Journal)
Volume:04/Issue:01/January-2022 Impact Factor- 6.752 www.irjmets.com

Table 1: Technical Specifications

Technical Specifications	
Manufacturer	Rockwell Automation
Brand	Allen-Bradley
Series	MicroLogix 1400
Module Type	Controller
Part Number/Cat log No.	1766-L32BWA
Inputs	8, Digital Normal 24V dc, 12 Digital Fast 24V dc
Outputs	12 Relay
Operating Power	110-240V AC
Channel Count	(20) IP, (12) OP
Memory	20 KB
Input power	100 to 240 VAC
Wire Size	22 to 14 AWG
Cable length	30m
Resolution	12 bit
Feature	Built-in RTC

2. Proximity Sensor

An inductive sensor is a type of proximity sensor. An inductive sensor is a form of non-contact sensor that can be used to detect metallic objects. The monitoring and counting can be done without actually touching the target. That is the biggest advantage.

Figure 4: Inductive Proximity Sensor

3. Traffic Control Signals

Traffic lights are also named stoplights, road traffic lamps, traffic signals, stop-and-go lights which are signaling devices placed at road crossings. The signal consists of three indicator lamps on each side of the junction in a traffic control system: Red, Yellow and Green. At the intersection, there are a total of 12 LAMPs displaying three different colors.

e-ISSN: 2582-5208
International Research Journal of Modernization in Engineering Technology and Science
(Peer-Reviewed, Open Access, Fully Refereed International Journal)
Volume:04/Issue:01/January-2022 Impact Factor- 6.752 www.irjmets.com

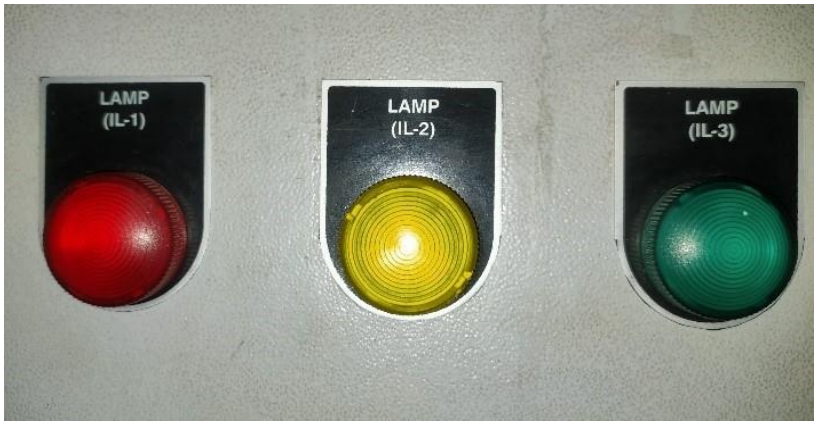

Figure 5: Traffic Control Signals

4. Push Buttons: -

The prototype includes two Pushbuttons, PB1 and PB2. The NO (Normally Open) contact is on the PB1 (Push Button 1), whereas the NC (Normally Closed) contact is on the PB2 (Push Button 2). The signal is started using the PB1. PB2 has also used the emergency off or stop signal for this purpose.

Figure 6: Push Buttons

VII. CONCLUSION

The aim is to design and implementation of this system that is directly targeted to the conventional traffic management system, so that emergency vehicles on road gets easily clear in less time and without any disturbance. By automatically converting the traffic signal to green and allowing emergency vehicles to pass through the lanes, this technology can help reduce the chances of accidents and traffic congestion. The inductive proximity sensor with Allen Bradley PLC this interface is synchronized with the whole process of the traffic system. The program is given to PLC and according to that program, the system work, and traffic can be controlled. This system makes the road safer for the public while traveling on roads.

VIII. REFERENCES

[1] Muhammad Arshad Khattak "PLC Based Intelligent Traffic Control System", International Journal of Electrical & Computer Sciences IJECS-IJENS Vol: 11 No: 06

[2] Mohit Dev Srivastava, Prerna, Shubhendu Sachin, Sumedha Sharma, Utkarsh, "Smart Traffic Control System Using PLC and Scada", TISSN: 2319 – 8753, International Journal of Innovative Research in Science, Engineering and Technology Vol. 1, Issue 2, December 2012

[3] Rajeshwari Sundar, Santhoshs Hebbar, and Varaprasad Golla "Implementing Intelligent Traffic Control System".

[4] Ghazal, Bilal & Khatib, Khalamp & Chahine, Khalamp & Kherfan, Mohamad. (2016). Smart traffic light control system. 140-145. 10.1109/EECEA.2016.7470780.z

[5] Barz Cristian & Todea Ciprian & Latinovic Tihomir & Preradovic, Dragana & Deaconu, Sorin & Berdie, A dela. (2015). Intelligent traffic control system using PLC. IOP Conference Series Materials Science and Engineering. 294. 012003. 10.1088/1757-899X/144/1/012017.

[6] Joshi, Jaswandi G., and D. D. Ahire. "A Brief Survey on Programmable Logic Controller and Its Versatile Applications Using Scada System."

[7] Ganapathi, Padmavathi & Shanmugapriya, D. & Kalaivani, M. (2010). A Study on Vehicle Detection and Tracking Using Wireless Sensor Networks. Wireless Sensor Network. 2. 173-185. 10.4236/wsn.2010.22023.

[8] Caramihai, Simona & Dumitrache, I. & Voinescu, Monica & Udrea, Andreea & Munteanu, Calin. (2010). Integrated modeling and control platform for urban traffic networks. Conference Proceedings - IEEE International Conference on Systems, Man and Cybernetics. 171 - 176. 10.1109/ICSMC.2010.5642225.

[9] Payal Paygude, Sumit Ghodke, Pavan Kshirsagar, Atul Mali, Mr. Ajay Lohate, Active Solar Tracking System Using PLC and SCADA, International Journal of Engineering Research in Electrical and Electronic Engineering (IJEREEE) Vol 7, ISSN (Online) 2395-2717, DOI: 01.1617/vol8/iss8/pid01572, Issue 8, August 2021.

[10] Ajay Lohate; Mandar Chaudhari "Thyristor Binary Compensator Strategy for Reactive Power Compensation and PF Improvement using Static VAR Compensator",2018 International Conference on Recent Innovations in Electronics & Communication Engg. (ICRIEECE) (DOI: 10.1109/ICRIEECE44171.2018.9008980) Date of Conference: 27-28 July 2018, Date Added to IEEE Xplore: 27 February 2020, Publisher: IEEE Bhubaneswar, Uddisa, India.