e-ISSN: 2582-5208
International Research Journal of Modernization in Engineering Technology and Science
(Peer-Reviewed, Open Access, Fully Refereed International Journal)
Volume:04/Issue:03/March-2022 Impact Factor- 6.752 www.irjmets.com

A SMART HOME AUTOMATION SYSTEM CONTROLLED BY ANDROID DEVICE

Mayur Borse[*1], Abhijeet Gadge[*2], Aniket Chavan[*3], Shital Khote[*4]

[*1,2,3]Student, Information Technology Department, JSPM's Jaywantrao Sawant Polytechnic, Pune, Maharashtra, India.

[*4]Professor, Information Technology Department, JSPM's Jaywantrao Sawant Polytechnic, Pune, Maharashtra, India.

ABSTRACT

Home automation makes it possible for all electrical appliances in our home (such as lighting systems, Washing Machines, Televisions, AC's and Refrigerators) to be easily accessed and effectively controlled by user from remote location. This means that you can turn your lights on from the other room, change the channel on your TV without getting up, turn on the AC when it gets hot and turn it off when it cools off, and so on. This not only saves time and effort, but also reduces the risk of mistakes causing fires or electric shocks. There are different types of home automation system available in the market. Each type has its own advantages and disadvantages. Some of the main types of home automation system are ZigBee, Bluetooth based, Remote Controlled and also using PIR sensors. All these systems are good, but unfortunately, they are only effective for short distances (100 meters maximum) within a particular locality. Today, we will be discussing about the best way of home automation using GSM Module. This is possible because GSM module works on the same technology as the mobile network, which can be used to send and receive signals across the world. This means, you don't have to worry about the internet.

Keywords: Arduino Uno, GSM Module, Four Channel Relay Module, Mobile Phone.

I. INTRODUCTION

We are within the midst of an era where the technology has solved most of our problems. the event of digital information has led to the rapid change in human life-style. the employment of electricity is extremely important mutually of the most sources of energy that's vital in modern lives today. With depleting resources there has been a powerful urge to avoid wasting energy and find alternatives. because the years blow over, era has been changing and as a result new approach are being developed for easier and safer control of electrical devices for more efficient power management at homes and at work places. The proposed home automation system allows user to manage any home appliances from remote location. it's possible only due to the GSM Module. The concept behind this method is to only receive the sent message from mobile so processing it to perform the required task or function. this can be most useful for people living since it allows them to remotely monitor their appliances. Basically, if an easy mobile takes on the added responsibility to regulate the electrical appliances of home, then the control has no geographical boundaries. Nowadays the mobile services are so developing, a system which might control home appliances and lighting from anywhere should appeal to a really large population.

II. RELATED WORKS

The previous works were done on such system which was mainly based on the use of telephone line, i.e., using a phone-based system for home automation and using a hardware-based remote controller system. This method is not only inefficient but also not suitable for the system of home automation. In other words, the existing system cannot provide the convenience, reliability and usability of modern home automation.

A. ZigBee

A ZigBee solution for home automation systems has significant limitations. The ZADI standard uses a single channel that is shared with other devices, and cannot detect if a motion sensor or light switch has been activated. Zigbee can only detect whether a device is ON or OFF, not what state it is in.

B. Bluetooth

This system has some disadvantages. First, the system costs too much and the system uses a lot of energy. Second, the system does not work on all appliances and also the system can be controlled in limited area.

e-ISSN: 2582-5208
International Research Journal of Modernization in Engineering Technology and Science
(Peer-Reviewed, Open Access, Fully Refereed International Journal)
Volume:04/Issue:03/March-2022 Impact Factor- 6.752 www.irjmets.com

C. Remote Controlled

The drawbacks of remotely control home automation system are: It does not allow you to access the home appliances from anywhere in the world; it has limited options for control, and not all devices can be controlled with this type of home automation system. Also, there is no way to program a schedule for that home automation system.

D. Using PIR Sensors

One disadvantage of home automation system using sensors is that it is quite costly. In the example shown, sensors were installed to control the lighting, and appliances such as the air conditioner and the television, but it will not work for appliances such as the washing machine, the refrigerator and the water heater. For those appliances, the user has to manually turn them on or off.

III. METHODOLOGY

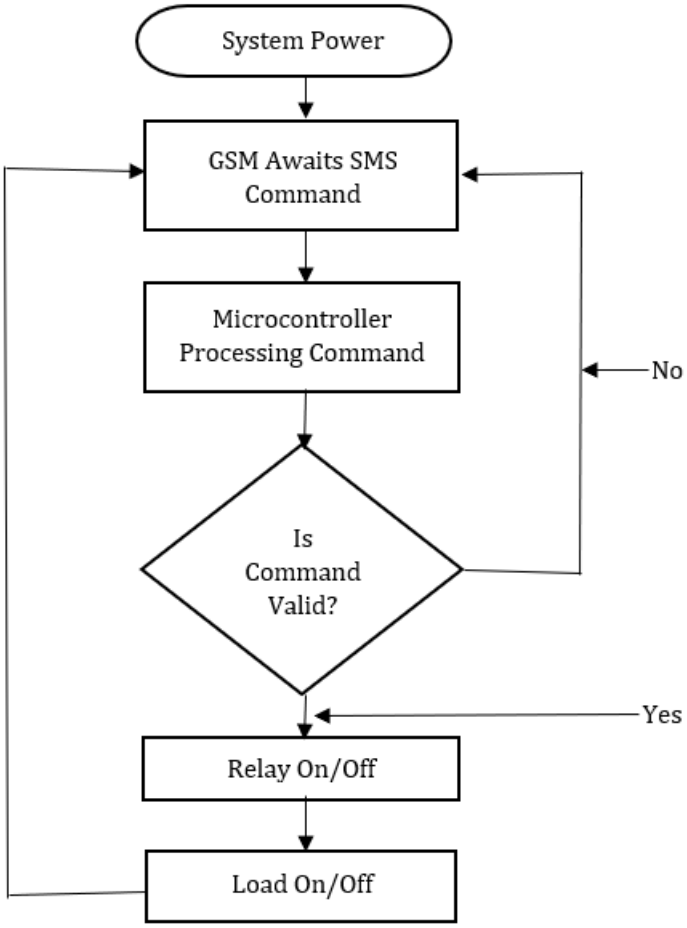

Figure 1: Block Diagram of System

IV. PROPOSED SYSTEM

The proposed system is GSM based home automation system. the house Automation System suffers through many problems. Although, this technique is implemented with other communicating modules like Bluetooth module, WI-FI module etc. but they need range limitation i.e., they'll operate up to a particular distance reckoning on the range. But GSM based system allows the user to manage the device from any a part of the globe providing he should be subscribed to a service provider. The system also will give the present status of appliances. The system may be controlled through transportable. this is often a really good feature as we are able to reach the system from anywhere. The system also will help to cut back the electricity bill. The system will have the flexibility to regulate the lights, AC, heat, CCTV etc. this can be possible by sending a command to the corresponding appliances through SMS. The system development involves implementing the hardware modules such as GSM Module, Microcontroller, Relays, power supply and Loads, as shown in the "Figure 1 – Block Diagram of System" which are required to create a complete automation system.

e-ISSN: 2582-5208
International Research Journal of Modernization in Engineering Technology and Science
(Peer-Reviewed, Open Access, Fully Refereed International Journal)
Volume:04/Issue:03/March-2022 Impact Factor- 6.752 www.irjmets.com

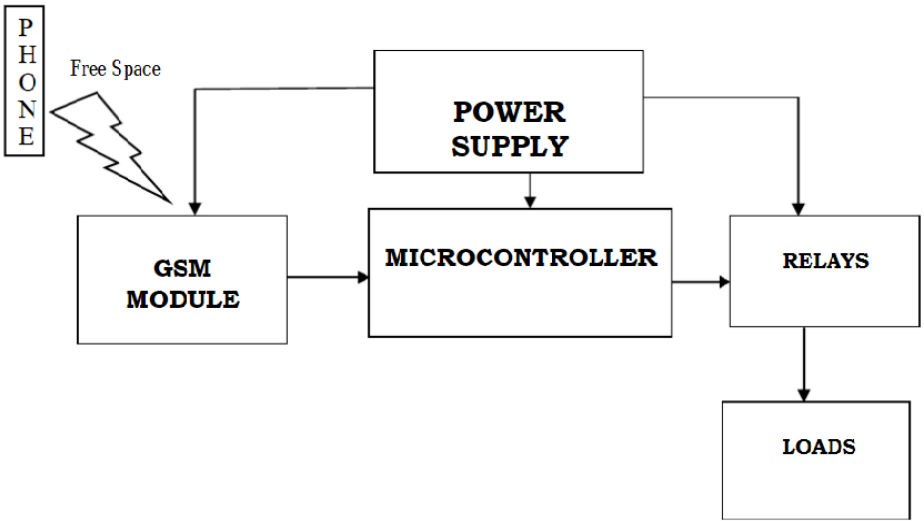

Figure 2: Architecture of System.

V. RESULT AND DISCUSSION

The GSM home automation system consists of an Arduino Uno as a controller, SIM900 as an SMS gateway, 4-channel relay as an output and a smartphone as an input. The system functions supported the set of instructions or messages sent through a smartphone via SMS gateway to the Arduino Uno microcontroller. Hence, the Arduino Uno further interprets, extracts, processes and controls the relay switching unit supported the user-defined instruction inform of a string of knowledge to either activate or OFF the household appliances and devices. Then, the user receives a notification as feedback mechanisms from the Arduino Uno via the smartphone on the status of the appliances. the look prototype was experimental with ten different input file string to verify its potency also because the Arduino Uno SMS feedback schemes was also examined.

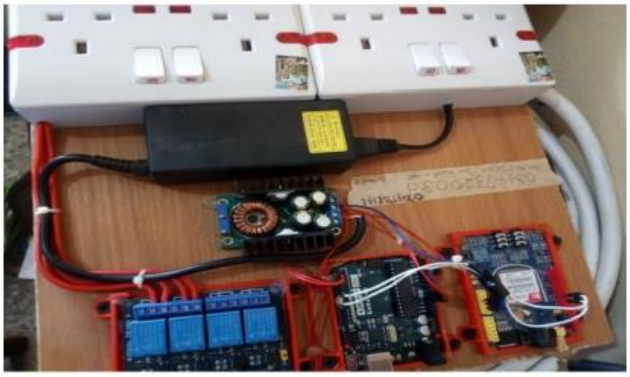

Figure 3: Developed GSM Home Automation System.

Figure 3 shows fan ON when the mobile send message #A.fan on*, the GSM Module initialized, the LCD display initialized and then the LCD display shows fan ON and the fan is ON.

Figure 4: Picture of Fan ON.

e-ISSN: 2582-5208
International Research Journal of Modernization in Engineering Technology and Science
(Peer-Reviewed, Open Access, Fully Refereed International Journal)
Volume:04/Issue:03/March-2022 Impact Factor- 6.752 www.irjmets.com

Figure 5 shows light ON when the mobile send message #A.light on*, the GSM Module initialized, the LCD display initialized and then the LCD display shows light ON and the light is ON.

Figure 5: Picture of Light ON.

VI. CONCLUSION

With the rise within the consumption of energy and population, there's a good have to conserve energy in every way possible. the shortcoming to access and control the appliances from remote locations is one among the main reasons for energy wastage. This thesis presents the event and implementation of a worldwide System for Mobile Communication (GSM) based device system for electrical appliances and lighting that allows complete control of the interface on which it's based. GSM Shield was used for receiving short message service (SMS) from the homeowner as movable that automatically enables an Arduino microcontroller to require the required actions like switching OFF and ON electrical appliances like fan, light, air-conditioner, supply mains so on. Basically, it reads the SMS and acts in step with the message. Similar products commercially available are Internet dependent and then lack truth sense of real mobility and security. However, this GSM based device system allows the homeowner to manage household appliances from anywhere using the portable and also prevents unauthorized access to those appliances. Crucial to the current system is that the provision of security on detection of intrusion via SMS using GSM technology.

VII. REFERENCES

[1] Singh, Pawan, et al. "A Review Paper on Smart GSM Based Home Automation System." (2016).

[2] J. Walko, “Home Control,” Computing & Control Engineering Journal, vol.17 (5), pp.16, 19 Oct-Nov

[3] [17Ano] Anonymous: Student, dept. Of Electronics and Communication Engg, Manav Rachna University, Haryana, India, 2017.

[4] [17Ano] Anonymous: https://www.arduino.cc/en/main/Arduin o Board Uno. [Accessed 2 January 2017].

[5] Puri, E. V., & Nayyar, A. (2016). Real Time Smart Home Automation based on PIC Microcontroller, Bluetooth and Android Technology. IEEE International Conference on Computing for Sustainable Global Development (INDIACom), pp. 1478-1484.

[6] Piyare, R., & Tazil, M. (2011). Bluetooth Based Home Automation System Using Cell Phone. IEEE 15th International Symposium on Consumer Electronics, pp. 192-195. Singapore.

[7] GSM Modems, http://www.nowsms.com/doc/configuringsmscconnections/gsm-modems

[8] Arduino IDE, http://arduino.cc/en/main/software

[9] Darlington Transistor Array, Texas Instruments, http://www.ti.com/lit/ds/symlink/uln2803a.pdf

[10] https://create.arduino.cc/projecthub/avinesh/ gsmbased-home-automation-fe5e57#code