e-ISSN: 2582-5208
International Research Journal of Modernization in Engineering Technology and Science
Volume:03/Issue:05/May-2021 Impact Factor- 5.354 www.irjmets.com

A REVIEW PAPER ON COMPARISON OF STATCOM AND UPQC FOR COMPENSATION OF VOLTAGE SWELL IN WIND FARM TO WEAK GRID CONNECTION

Nilesh M. Wankhade*1, Prof. Dr. Vijay Gajanan Neve*2

*1Department of Electrical (Electronics & Power) Engineering, Padm. Dr. V. B. Kolte College of Engineering Malkapur, Maharashtra, India.

*2Professor & Head, Department of Electrical Engineering, Jagadambha college of engineering and technology, Yavatmal, Maharashtra, India.

ABSTRACT

The breeze power age joined into standard networks has been expanded essentially. The present circumstance constrained the modification of lattice association code necessities, to ensure the dependability in frameworks with high wind power infiltration. If there should arise an occurrence of three stage impede, lists are seen close to the mark of disappointment, and portrayed by an abrupt voltage decrease and slacking stage hop. For enlistment generator-based breeze ranches associated with powerless lattices, such hang may prompt breeze ranch blackout, because of restricted low voltage ride through ability of acceptance generators. In this work a voltage list pay system is proposed for adequacy and stage hop rebuilding and contrasted and sufficiency just remuneration methodology. These strategies were implemented using an Unified Power Quality Compensator UPQC. Unlike other Custom Power Devices like DVR and D-Statcom, the UPQC has the feature of active power sharing between shunt and series converters through DC-link; thus, series voltage injection with any phase angle may be maintained without the need of power source installed in DC bus. Result shows a better wind farm performance in proposed strategy than that found in magnitude only compensation schemes. Thus, considering the improvement in performance, the proposed strategy is recommended in retrofitting the existing installed fixed speed induction generators-based wind farms.

I. INTRODUCTION

In the past, the penetration of wind energy into the electric power system was low. Then, in case of grid faults, the wind farms were simply disconnected without consequences on system stability. In the last decades, the wind energy penetration has been increased significantly, and stills increasing. This situation forced the revision of electric utilities grid codes requirements, to guarantee the reliability in systems with high penetration levels. In steady–state condition, wind farms must provide ancillary services, like the conventional power plants, e. g. reactive compensation, voltage and frequency regulation, etc.; in transient conditions, wind farm must withstand several types of disturbances coming from the grid, such as voltage sags, swells, etc., keeping the connection to the power system once disappeared such disturbances, to avoid power unbalance and even system collapse.

In case of three–phase short–circuit occurrence, voltage sags are observed near the point of failure, and characterized.

By a sudden voltage reduction and lagging phase jump. For induction generator-based wind farms such sag may lead to wind farm outage, due to reactive power needs to restore the internal magnetic flux once the fault is cleared. So, its behavior limits the low voltage ride–through capability in this type of generators. Performance comparison of Custom Power System devices (CUPS) like D-Starcom, Dynamic Voltage Restorer (DVR), Unified Power Quality Conditioner (UPQC) for low voltage ride–through enhancement have shown a better performance and even lower power rating in case of UPQC compensator than the other CUPS devices. In previous works, strategies using UPQC had been proposed to improve such capability, but mainly concentrated on magnitude of the voltage sag, whereas little attention has been paid to the phase jump [. In this work, the behavior of a wind farm with squirrel cage induction generators, connected to a weak grid and facing three-phase voltage sag, is analyzed. To improve the wind farm low voltage ride–through capability, a voltage level restoration with phase compensation is proposed, and compared with "magnitude restoration only" strategies.

System description and modelling is developed in section II. The modelling includes wind farm (turbine and generator's model) and compensator's model. Voltage sag generation at wind farm terminal is also discussed in this section. In section III the proposed strategy with both phase and magnitude compensation is presented, and magnitude only restoration strategy is described. The section IV presents some consideration about DC bus voltage regulation. In order to show the the proposed strategy performance, and to compare it with "magnitude restoration only" strategies, in section VI simulations are realized. Also is presented the wind farm behavior without compensation

II. SYSTEM DESCRIPTION AND MODELLING

The system under study is composed by a wind farm connected to a weak distribution network. This system is taken from a real case [6]. Fig.1 shows a single–line system diagram. The wind farm generation facility is composed by a total of 36 fixed-speed induction-generator wind turbines, adding up to 21.6MW. Each turbine has attached a 175kVAr compensation capacitor bank and is connected to the distribution grid by means of a 0.69/33kV, 630kVA transformer.

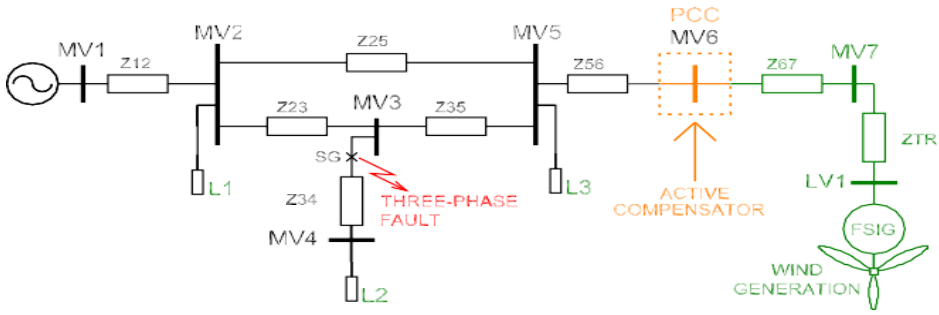

Fig. 1: Power system study case. Single-line diagram.

As seen in Fig.1, MV1 represents the infinite bus, and there are three loads in MV2, MV4 and MV5 buses. Distribution grid nominal voltage is 33kV. The ratio between short circuit power at the point of common coupling (PCC) bus (MV6) and wind farm rated power, give us an idea of the "connection weakness". Thus, considering that the value of short circuit power in MV6 is SSC ≃ 120MVA this ratio is calculated:

r = SSC PW F ≃ 5.5

Values of r < 20 are considered as a "weak grid" connection.

A. Model of wind farm

A complete model of the wind farm is obtained by turbine aggregation; this implies that the whole wind farm can be modeled by only one equivalent wind turbine, whose power is the arithmetic sum of the power generated by each turbine Pi.

Pi = 1 2 · ρ · π · R 2 · v 3 · CP.

Where ρ is air density, R the radius of the swept area, v the wind speed, and CP the power coefficient. In the study case this values are R = 31.2 m, ρ = 1.225 kg/m3 , and CP values are taken from the classical model presented . Boundary layer effect and turbulence in wind speed are neglected, For the squirrel cage induction generator, the model available in MATLAB/Simulink Supersystems c libraries is used. It consists of a fourth–order state–space electrical model and a second–order mechanical model]. Wind turbine inertia is represented as concentrated in the generator's rotor.

B. Voltage sags

Voltage sag is a decrease in voltage level (0.1p.u – 0.9p.u.), lasting from 0.5 cycle to 1 min. In the occurrence of three phase faults (short circuit), voltage sags are observed near the point of failure, and characterized by a sudden voltage reduction and lagging phase jump.

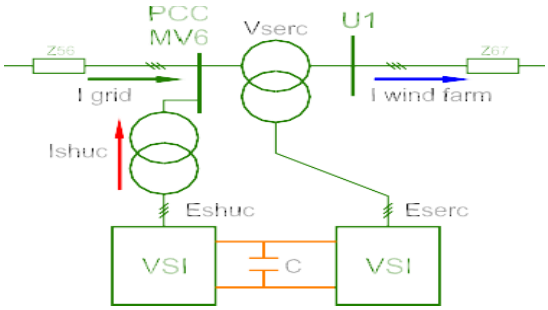

Fig. 2: Block diagram of UPQC

Lagging phase–jump is due to circulating short circuit currents and inductive nature of electrical grid. In the study case, a three-phase fault was generated in MV3 bus (see Fig.1) by means of a controlled switch installed in that bus, lasting for 500ms. The voltage sag at the point of common coupling PCC (MV6), can be estimated in simplified form using phasor algebra and disregarding the wind farm generated power.

PCC voltage sag 0.4pu phase jump $\Delta\phi$: -30° fault duration Δt : 500ms.

This voltage sag with phase jump occurs almost instantaneously, as will be seen in the simulation section VI. During the voltage sag, the magnetic flux of induction generator is reduced significantly, and therefore also electromagnetic torque; rotor speed increases due to wind turbine torque action. Once fault is cleared, the reactive power demand of generators is increased due to higher rotor slip. In case of weak grids, this situation will limit terminal voltage recovery.

C. Active compensator model

In several CUPS devices are presented, like D-Statcom, DVR, UPQC, fast transfer switches, among others. These devices are used at distribution level to compensate flicker, power quality, active and reactive power, etc. The compensation action of such devices is based on three phase voltage generation, by using electronic converters of either voltage source type (Voltage Source Inverter–VSI) or current source type (Current Source Inverter–CSI). VSI converter are preferred because of its lower DC link losses and faster response than CSI converter.

In our case, compensation strategy of voltage sag will be accomplished by using an unified type compensator UPQC. Fig.2 shows a simplified diagram of this compensator; the busbars and impedances numbering is referred to Fig.1. The shunt converter of UPQC is responsible for injecting current at PCC, while the series converter generates voltages between PCC and U1.

An important feature of this compensator is the operation of both VSI converters (series and shunt) sharing the same DC bus, enabling active power exchange between them. This feature is exploited in the proposed. Since switching control of converters is out of the scope of this work and considering that higher order harmonics generated by VSI converters are outside the bandwidth of significance in the simulation study, the converters are modelled using ideal controlled voltage sources.

The AC–side simulation model for the UPQC has been developed, based on the ideas taken from . Thus, the control of the UPQC is implemented in a rotating frame using Park's transformation, also called synchronous reference frame control. The use of this transformation allows the alignment of the rotating reference frame with the space vector corresponding to fundamental positive sequence PCC voltages. To accomplish this, a reference angle θ synchronized with this vector is needed. This reference angle is calculated using a Phase Locked Loop (PLL) system. In this work, a PLL based on the instantaneous power theory, has been implemented. Such PLL, features a fast tracking of PCC voltage (MV6) phase angle, even under voltage variation like unbalance, swells, sags, waveform distortion, etc.

So, measured phase voltage and line currents a, b, c are transformed to rotating synchronous reference frame d, q, 0. Positive sequence magnitudes becomes "DC values" in this frame, thus simplifying the controller design.

III. VOLTAGE SAG COMPENSATION STRATEGIES

In case of three phase fault, a deep voltage sag is observed at wind farm terminals. strategies using UPQC had been proposed to improve low voltage ride through of the wind farm, but mainly concentrated on magnitude restoration of voltage sags, whereas no attention has been paid to phase jump.

This phase jumps usually do not affect induction generator operation, but may cause tripping of equipment and auxiliary devices, like contactors, battery chargers, etc., leading to wind farm power outage. In the following subsections, a classical full voltage magnitude restoration strategy, and the proposed magnitude restoration plus phase compensation strategy, are presented. A. Full voltage restoration Fig.3 shows a steady state phasor diagram, representing pre– sag condition at PCC bus. PCC voltage level is normal, so series converter injected voltage is zero. The shunt converter is generating some reactive power. During voltage sag, the fast-tracking action of PLL system, aligns almost instantaneously the reference frame with PCC reduced vector voltage. The series compensator restores the amplitude of wind farm terminal voltage, generating in–phase voltage, but phase jump is not compensated at U1 busbar. The reference voltage calculation for injected V voltage, is showed block diagram of Fig.4.

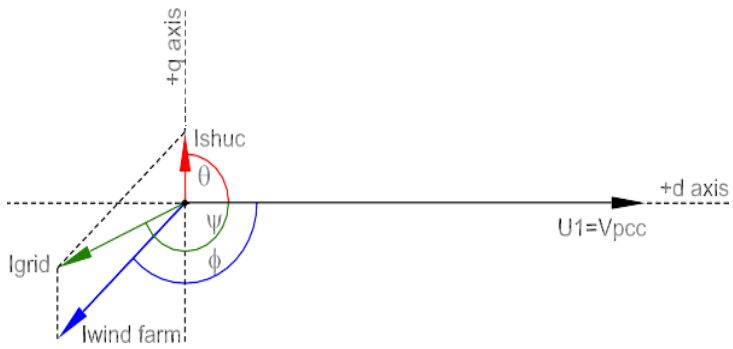

Fig. 3: Phasor diagram: pre-sag condition.

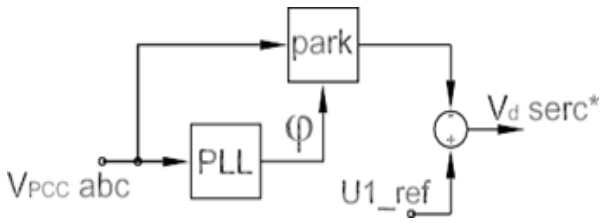

Fig. 4: Magnitude compensation. Block diagram.

Fig.5 shows a phasor diagram, illustrating the compensator action during voltage sag. In the figure is cleared showed that the phase angle of current in suddenly reduced due to phase jump. $\varphi' = \varphi - \Delta\phi$ So transient will occur until pre–sag condition in current phase is reached.

B. Full voltage restoration and phase compensation

If in addition to voltage magnitude restoration, phase jump compensation is included, transient in wind farm generated current, and tripping of auxiliary devices of wind farm facilities will be avoided. To implement this strategy, it is necessary to quantify the value of the phase jump. This is achieved by the use of two-phase locked loops (PLL) circuits; one of them, with a fast response is responsible of instantaneous synchronization with PCC voltage vector (this PLL is also used in the current control loop of the shunt converter). The other PLL, with slower response, transiently "holds" the initial phase jump angle. The phase jump $\Delta\phi$ at wind farm terminals, is calculated using the following equation:

$\Delta\phi = \phi$ P LL fast $- \phi$ P LL slow

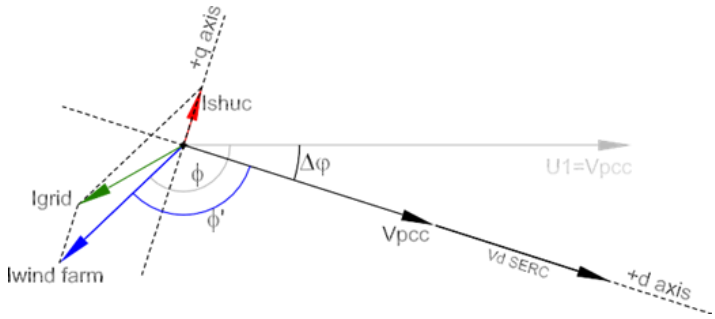

Fig. 5: Phasor diagram: post-sag condition

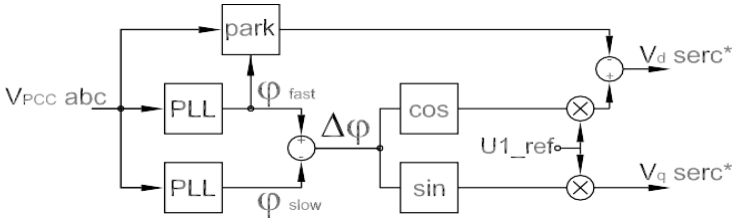

Fig. 6: Phase and magnitude compensation. Block diagram

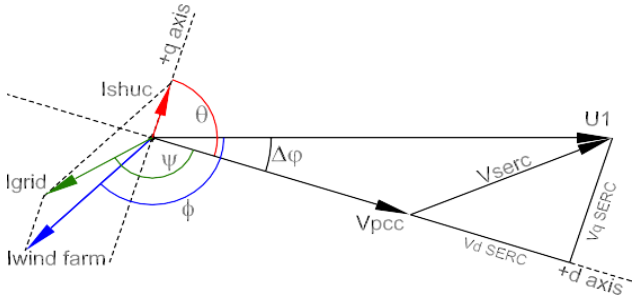

Fig. 7: Phasor diagram: initial compensation action

The control block diagram for V d,q serC ∗ reference calculation is shown in Fig.6. Fig.7 shows in a phasor diagram, the compensation action. In the proposed strategy, the compensation phase angle Δϕ is not maintained during voltage sag. It decreases with time towards zero, as slower PLL reaches steady state phase (the same angle as fast PLL). Fig.8 shows this situation. Hence, the phase of wind farm terminal voltage varies in a controlled manner from pre–sag value, towards zero (that is, phase aligned with PCC voltage during voltage sag). Thus, final condition during voltage sag, is the same in both compensation schemes. Additionally, the variation of source current phasor Igrid must be smoothly controlled, since rapid changes of active power injected into the grid, also generates phase jump in PCC voltage. This control is achieved through proper tuning of DC voltage controller.

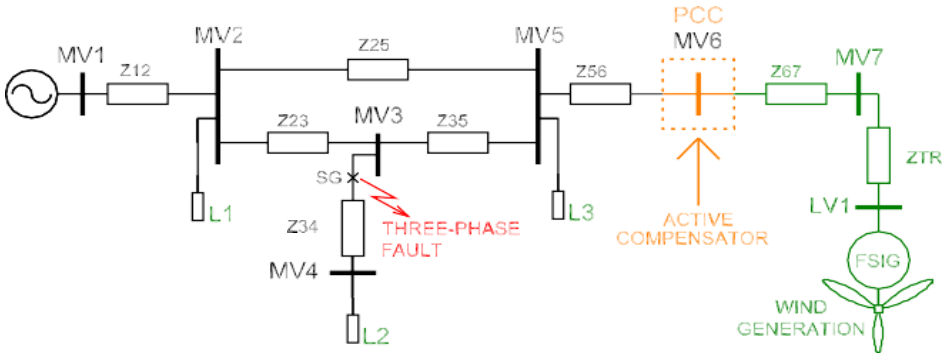

Fig. 8: Phasor diagram: final compensation action

e-ISSN: 2582-5208
International Research Journal of Modernization in Engineering Technology and Science
Volume:03/Issue:05/May-2021 Impact Factor- 5.354 www.irjmets.com

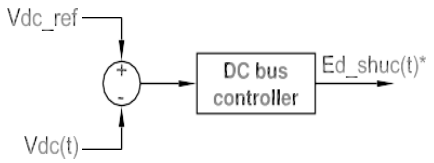

Fig. 9: DC voltage control. Block diagram.

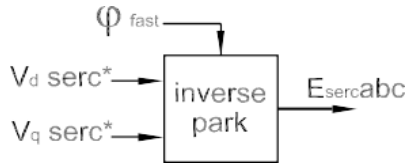

Fig. 10: Control of series converter.

IV. UPQC DC BUS VOLTAGE CONTROLLER

The regulation of the DC bus voltage has been assigned to the shunt converter. Voltage sag compensation action produce an increment of active power draw by series converter, thus causing an increase in DC bus voltage. Based on deviation from reference DC bus voltage, the shunt converter injects appropriate active current at PCC.

So, Ed reference voltage for shunt converter, contains the control action for the DC bus voltage control loop. This control action is calculated using a PI controller type. The control loop is tuned to obtain a slow response compared with phase jump compensation dynamics, avoiding PCC voltage phase variation due to active power injection. Fig.9 depicts the block diagram of DC bus voltage controller. Reactive power generation by shunt converter is not used in the presented strategy, so its maintained at fixed value during entire simulations.

V. CONTROL OF UPQC CONVERTERS

Both converters of UPQC are modelled using ideal controlled voltage sources (see II-C). Voltage reference for series converter are calculated either with block diagram of Fig.4 for magnitude compensation, or with block diagram of Fig.6 for magnitude–phase compensation. In case of shunt converter, voltage reference is calculated using the controller depicted in Fig.9 for DC–bus voltage regulation. As depicted in Fig.10, series converter model employed is straightforward; voltage drop due to load current is neglected for this converter. In case of shunt converter, a decoupling control is employed [15] as seen in Fig.11.

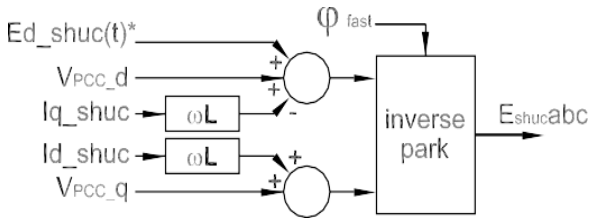

Fig. 11: Control of shunt converter.

VI. RESULTS AND DISCUSSION

First, wind farm behavior facing a voltage sag is analyzed (no-compensation case). Such voltage sag is produced by a short circuit in MV3 busbar. Then, both compensation strategies for the voltage sag are simulated, and a performance comparison of both strategies is also conducted.

A. Wind Farm low voltage ride through capability

A voltage sag, with 500ms of duration time, appears at wind farm terminal reducing significantly induction generator magnetic flux, and therefore the electromagnetic torque; the rotor speed increases almost linearly due to the action of the wind turbine torque. The wind farm terminal voltage and rotor speed behavior. Once the fault is cleared, the speed of the machines is higher than before voltage sag. At this point, the reactive power required by the wind farm generators has risen due to a higher rotor slip, limiting voltage recovery and widening the voltage sag duration time. It is clearly seen in the figure, that the wind farm speed cannot remain stable.

B. Compensation of voltage sag

The strategies for voltage sag compensation presented were implemented and simulated using Matlab/Simulink SimPowerSystems c . The phase angle of U1 voltage is shown for the three simulation cases: no compensation case, magnitude only compensation case, and magnitude–phase compensation case.

The observed difference beetwen Δϕ estimated in II-B is mainly due to wind farm active power generation. High frequency transient is observed at t = 0.5 s due to perturbed current injected at PCC. The phase behavior in case of presented strategy clearly shows the controller action.

The proposed strategy prevents the sudden phase jump, resulting in a controlled evolution of phase angle in time. This behavior is also observed when fault is clear, and voltage tends to be restored. The wind farm rotor speed is also benefiting from the compensation strategy. the evolution of rotor speed in both cases, for the purpose of comparing their behavior. The wind farm generator's current ia(t) also performs better in the proposed strategy than in case of full–magnitude restoration, as is clearly seen in lower waveform of DC bus voltage controller action As aforementioned, the DC bus voltage regulation has been assigned to the shunt converter. For this control loop the same controller has been used in both compensation schemes. During voltage sag, the series converter injects power into the DC bus, and the shunt converter draws power from it to maintain the voltage level, as Due to the slow response of shunt converter control loop, an excess of energy is stored in capacitor, increasing its voltage. The capacitor value must be largely enough to handle this amount of energy, allowing an adequate decoupling of active power between series and shunt converters. It is also possible to attach a storage system in DC bus for this purpose.

VII. CONCLUSION

In this work, we will conclude that a strategy for voltage sag compensation is presented with magnitude restoration and phase jump compensation. Results show will be a better wind farm performance in proposed strategy than that found in magnitude only compensation schemes. Moreover, the proposed strategy does not need converters with higher power rating than that found in other schemes. Thus, considering the improvement in performance, the proposed strategy is recommended in retrofitting the existing Induction Generator based Wind Farms.

VIII. REFERENCES

[1] M.P. Pa´lsson, K. Uhlen, J.O.G. Tande. "Large-scale Wind Power Inte- gration and Voltage Stability Limits in Regional Networks"; IEEE 2002. p.p. 762–769

[2] Grid Code, High and extra high voltage. E.ON Netz GmbH, Bayreuth, Germany. August, 2003.

[3] I.M. Alegr´ıa, J. Andreu, J.L. Mart´ın, P. Iban˜ez, J.L. Villate, H. Camb- long."Connection requirements for wind farms: A survey on technical requirements and regulation". Renewable and Sustainable Energy Re- views 2007;11: 18581872.

[4] M. F. Farias, M. G. Cendoya , P. E. Battaiotto "Wind Farms in Weak Grids Enhancement of Ride-Through Capability Using Custom Power Systems". proc. on IEEE T&D LA Conference. 2008

[5] N.G.Jayanti, Malabika Basu, M.F.Conlon, K. Gaughan. "Rating require- ments of s Unified Power Quality Conditioner (UPQC) fo Voltage Ride Through Capability Enhancement"; 3rd IET International Conference on Power Electronics, Machines and Drives. 2006

[6] Z. Saad-Saoud, M.L. Lisboa, J.B. Ekanayake, N. Jenkins and G. Strbac "Application of STATCOM's to wind farms" IEE Proc. Gen. Trans.

[7] Distrib. vol. 145, No. 5; Sept. 1998

[8] P. Ledesma, J. Usaola, J.L. Rodriguez "Transient stability of a fixed speed wind farm" Renewable Energy 28, 2003 pp.1341–1355

[9] T. Burton, D. Sharpe, N. Jenkins, E. Bossanyi "Wind Energy Handbook" John Wiley & Sons, 2001. ISBN 0-471-48997-2.

[10] P. Rosas "Dynamic influences of wind power on the power system". Technical report RISØR-1408. Ørsted Institute. March 2003.

[11] The MathWorks, Inc. "SimPowerSystems Reference". 2007 Available online: www.mathworks.com